Unit 1

Pre-alignment considerations

Pre-Alignment Checks and Corrections are performed to either improve machinery reliability or to facilitate the alignment process. In either case, pre-alignment is a very important phase of the alignment process.

The pre-alignment process could include all of the following checks. (1) Clean up around and under machinery feet. (2) Consolidation of small dimensional shims with fewer thicker pieces. (3) Checking run out. (4) Checking pipe strain. (5) Performing a lift check to check bearing clearances. (6) Rough alignment. (7) Checking hub separation on spacer couplings. (8) Recording and tightening bolts in a known sequence. (9) Checking final soft foot.

Unit Goals:

We have limited the scope of this unit to what we term “the five pre-alignment essentials”. You will demonstrate understanding of the following terms and procedures: checking run out, rough alignment, correct gross soft foot, tightening bolts in a known sequence, and correcting final soft foot. You will be capable of performing pre-alignment checks and corrections.

Pre-Alignment Activities
Lesson 1: Checking run out
Lesson 2: Rough alignment
Lesson 3: Correcting gross soft foot
Lesson 4: Recording bolt tightening sequence
Lesson 5: Final soft foot
Lesson 6: Notes on other pre-alignment checks

Required Materials:
(1) Shaft alignment demonstrator
(1) Dial indicator (with magnetic base)
(1) Straight edge
(1) Box of pre-cut shims (size A)

Lesson 1: Checking run out

Lesson 1 Objectives:

At the conclusion of this lesson, the student shall be able to:

1. Explain the term run out.
2. Identify the causes of run out .
3. Demonstrate the use of a dial indicator to measure run out.
4. Evaluate run out values to determine necessary corrective action.

Run out

Run out is measured on the couplings or shafts. Run out occurs when couplings are bored eccentrically, shafts are bent, or when couplings are “out of round”. Correcting excessive run out requires replacing the defective coupling or shaft.

To check run out, a dial indicator is mounted to any point in space. Some examples of mounting positions are: adjacent couplings, machine bases, or bearing housings. The shaft to be checked is rotated while the dial indicator is stationary. The direction of indicator travel (positive or negative) is not important in evaluating the run out condition.

Shaft Alignment with the Shaft100 & Shaft200 Systems

Check run out

❶ Set up the dial indicator

☐ *The dial indicator is affixed to any point in space: bearing housing, machine base, hub (broken coupling)*

☐ *The dial indicator plunger contacts the hub or shaft to be checked*

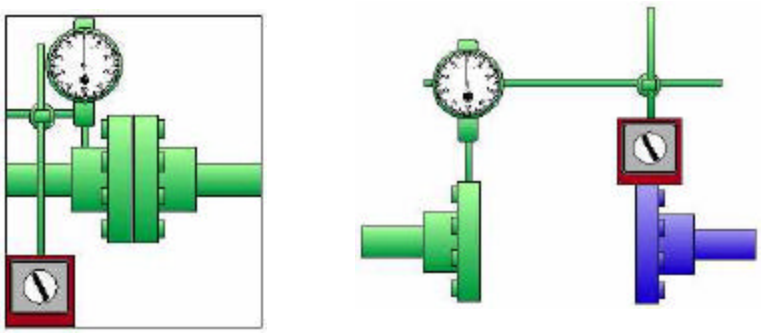

Figure 1- 1

Check run out

❷ **Measure run out**

☐ *The shaft to be checked is rotated until the dial indicator reaches a high point (+) or a low point (-).*

☐ *Adjust the dial indicator to zero.*

☐ *Rotate the shaft to be checked until the dial reads the maximum travel from zero.*

Figure 1- 2

Activity 1: Checking run out

Activity 1 Instructions:

1. On your alignment demonstrator, specify the movable and stationary machine elements.
2. Check & record the run out on the stationary (driven) element.
3. Use the run out tolerance chart to evaluate the run out condition.
4. Check & record the run out on the movable (driver) element.
5. Use the run out tolerance chart to evaluate the run out condition.

Checking Run Out	If	Then
Driven Side		
coupling run out	.002” or less	Driven side OK, go to driver side coupling
	greater than .002”	Check shaft run out
shaft run out	.001” or less	Shaft OK, coupling is eccentric
	greater than .001”	Shaft is bent
Driver Side		
coupling run out	.002” or less	Run out check completed.
	greater than .002”	Check shaft run out
shaft run out	.001” or less	Shaft OK, coupling is eccentric
	greater than .001”	Shaft is bent

Activity 1: Checking run out

Activity 1 Discussion:

1. What are the possible causes of run out?

2. Why do you check run out before attempting to align machines?

3. What are some causes of coupling eccentricity?

4. What action do you take if run out is excessive?

Lesson 2: Rough Alignment

Lesson 2 Objectives:

At the conclusion of this module the student shall be able to:

1. Demonstrate how to perform rough alignment.

Rough Alignment

Rough alignment is performed to expedite the precision alignment process. It is intended to quickly get the machines "in the ball park". On close coupled machines (those with no spacer coupling), rough alignment can be performed with a scale or any straight edge to remove vertical and horizontal offset misalignment. On machines with spacer couplings, we recommend that you correct both the angular and offset misalignment vertically and then the angular and offset misalignment horizontally.

VIBRALIGN

Shaft Alignment with the Shaft^{100} & Shaft^{200} Systems

Rough Alignment

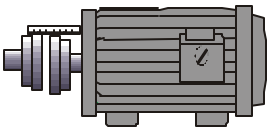

❶ **Using a scale or straight edge, correct rough vertical misalignment.**

☐ *Reference the highest hub. Place scale firmly on the highest hub.*

☐ *Raise or lower the movable shaft to within 20 mils (0.020") of the stationary hub.*

❷ **Correct rough horizontal misalignment.**

☐ *Reference the hub closest to you. Place scale firmly on that hub.*

☐ *Move the movable hub to within 20 mils (0.020") of the stationary hub.*

Figure 1- 3

Activity 2: Rough Alignment

Activity 2 Instructions:

1. Use a scale or straight edge to measure & correct vertical misalignment.
2. Use a scale or straight edge to measure & correct horizontal offset misalignment.
3. Leave all of the bolts loose.

Activity 2 Discussion:

1. Why do you perform rough alignment before attempting to precisely align machines?

Lesson 3: Checking gross soft foot

Lesson 3 Objectives:

At the conclusion of this module the student shall be able to:

1. Explain the term soft foot.
2. Identify the causes of soft foot.
3. Demonstrate how to identify a gross soft foot.
4. Correct gross soft foot.

Soft foot

Soft foot occurs when machine feet do not rest flatly on the machine base. Soft foot is caused by deformed machine base plates or by deformed machine feet. In either case, the effect when tightening the bolts is that bearings become misaligned, bearing clearances change, and the machine rotational center is moved. Machinery performance is adversely effected by a soft foot's effect on bearings. Precision alignment is nearly impossible to perform unless soft foot is corrected.

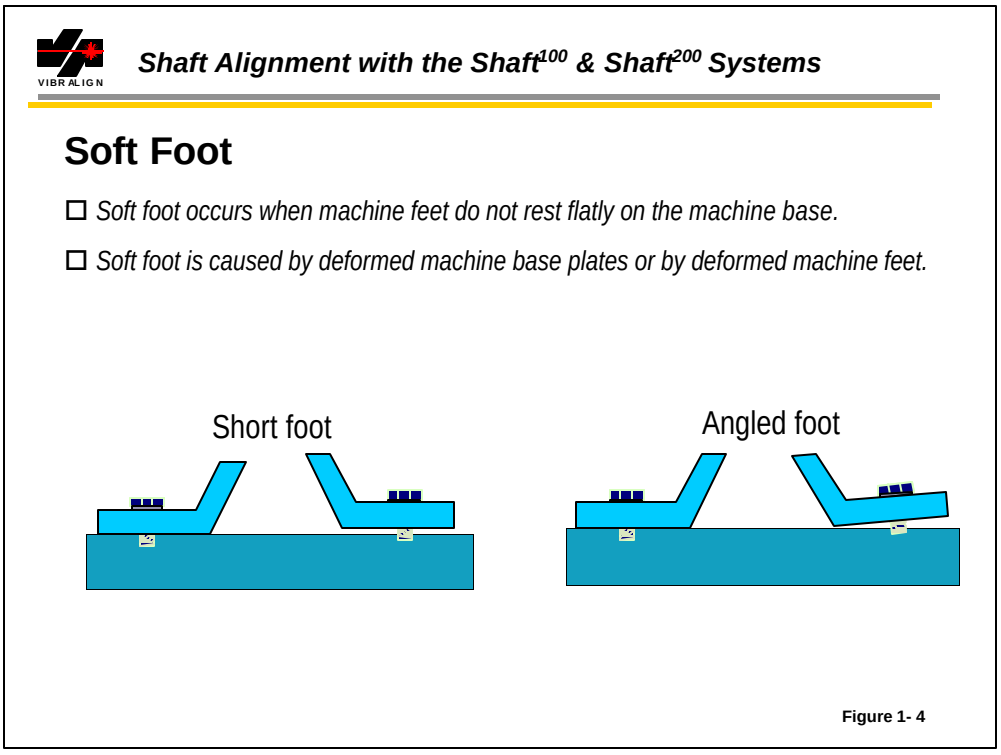

Figure 1- 4

Correct gross soft foot

❶ **Loosen all mounting bolts.**
❷ **Find any obviously loose shim packs.**
❸ **Correct by adding to the loose shim packs.**

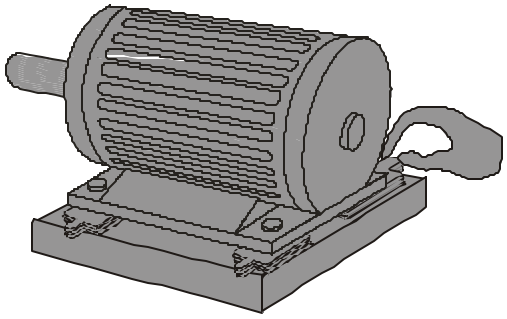

Figure 1- 5

Activity 3: Correcting gross soft foot

Activity 3 Instructions:

1. Mounting bolts of your alignment demonstrator should still be loose.
2. Check if any of the shims are loose (by feel) on the movable element.
3. Add shims to the loose foot until all of the shims feel equally tight.

Activity 3 Discussion:

1. What are the possible causes of soft foot?

2. Why do you check soft foot before attempting to precisely align machines?

3. Why do you think you were asked to make a rough alignment before checking soft foot on the movable element?

Lesson 4: The bolt tightening sequence

Lesson 4 Objectives:

At the conclusion of this module the student shall be able to:

1. Understand the need to maintain a specific bolt tightening sequence.

The bolt tightening sequence

You will find that specifying, recording, and maintaining a tightening sequence will result in better and quicker alignment. The fact is that machines will move (both vertically and horizontally) as we tighten down the bolts. This is true even after we correct soft foot. If you follow a known sequence, you will minimize and make this movement predictable during the alignment process.

Often when making vertical corrections, people will only loosen two bolts at a time to try to hold horizontal position. This practice is acceptable, but some horizontal movement will likely occur anyway. Therefore, you should re-loosen all bolts and retighten in the recorded sequence after all vertical adjustments are complete.

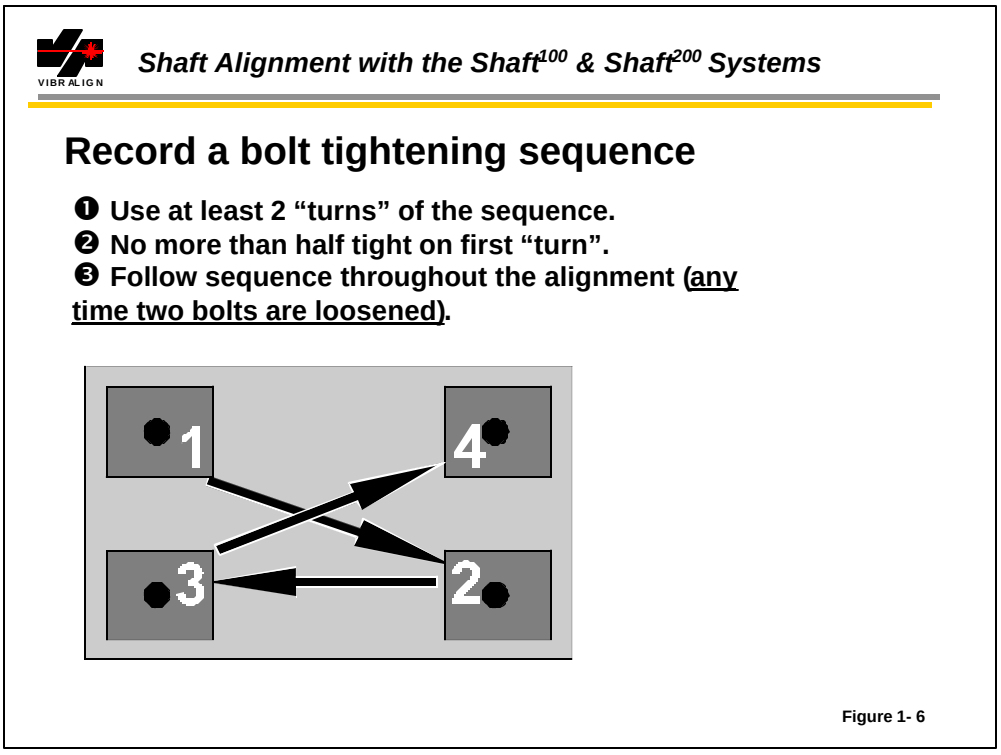

Figure 1- 6

Activity 4: The bolt tightening sequence

Activity 4 Instructions:

1. On your demonstrator, make sure that the mounting bolts for the movable element are loose.

2. Follow the tightening sequence recommended on the previous page.

3. Be sure to make at least two tightening “turns”.

Activity 4 Discussion:

1. Why should you follow a specific sequence when tightening bolts?

2. You are doing precise alignment later in the process. Only front foot adjustments are required. What would you do?

3. Later, when you are making vertical alignment corrections, you may choose to loosen only two bolts at a time. If you follow this practice, what should you do after you finish the vertical corrections?

Lesson 5: Correcting final soft foot

Lesson 5 Objectives:

At the conclusion of this module the student shall be able to:

1. Detect and correct final soft foot requirements
2. Identify whether an “angular’ correction is required
3. Explain how to correct angled foot.

Soft foot

Soft foot occurs when machine feet do not rest flatly on the machine base. Soft foot is caused by deformed machine base plates or by deformed machine feet. In either case, the effect when tightening the bolts is that bearings become misaligned, bearing clearances change, and the machine rotational center is moved. Machinery performance is adversely effected by a soft foot’s effect on bearings. Precision alignment is nearly impossible to perform unless soft foot is corrected.

If the foot has an angular relationship to the base, you can correct this by cutting a partial shim to make up the angular correction. When cutting partial shims from pre-cut stock, always leave the shim “tab” intact. The tab can be used to make each shim pile organized and the partial shim will return to the original position. Never “feather” shims out to fix an angled foot. It is unlikely that the angular correction will be duplicated when shim piles are changed are during the alignment.

VIBRALIGN

Shaft Alignment with the Shaft100 & Shaft200 Systems

Final Soft foot

❶ **Loosen <u>one bolt at a time</u>.**
❷ **Use a 2 mil (.002”) shim or feeler gauge to check.**
❸ **Correct any foot with 2 mils or more softness.**
❹ **<u>Re-tighten the bolt</u> after each check.**

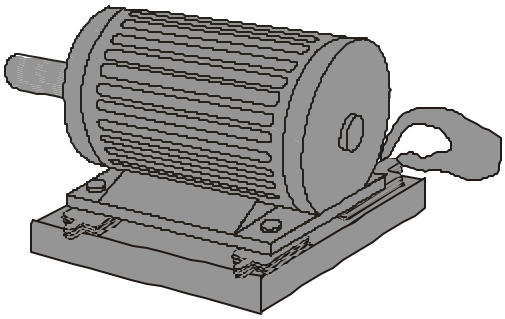

Figure 1- 7

Activity 5: Final soft foot

Activity 5 Instructions:

1. On your demonstrator, loosen one bolt at a time. Identify and correct any soft feet greater than 2 mils (.002”).

2. Identify, but do not correct, any angled feet.

Activity 5 Discussion:

1. Why is it unnecessary to use a dial indicator to check final soft foot?

2. Why do you use a 2 mil (.002”) shim to check?

3. What do you do if you find an angled foot?

Other pre-alignment checks

Coupling hub separation

The proper hub separation is specified by the coupling manufacturer. This will be a dimension in inches or thousandths of an inch (0.001”). A tolerance is usually specified +/- so many thousandths. Proper hub separation is very critical on spacer type couplings, especially gear type couplings. Hub separation is measured with inside micrometers or calipers. When measuring hub separation on large motors, take care to first position the shaft at magnetic center.

Pipe Stress

Pipe stresses can cause distortion of pump (and other driven machine) casings. This will result in bearing misalignment. It also can cause the impeller to be not centered in the casing. You can check pipe stress by mounting a dial indicator as you did to check run out. Loosen the flange bolts. If this results in shaft movement (as witnessed on the dial gauge), then flange misalignment is causing excessive stresses.

Unit 2

Setting up the *Shaft System*

Setting Up Activities
Lesson 1: Mounting the fixtures, TD's, and connecting cables
Lesson 2: Configuring the display unit & the shaft alignment program
Lesson 3: Entering dimensions & aiming the lasers

Required Materials:
(1) Shaft alignment demonstrator
(1) *Fixturlaser Shaft System*

Lesson 1: Mounting the fixtures, TD's, and connecting cables

Lesson 1 Objectives:

At the conclusion of this module the student shall be able to:

1. Demonstrate mounting the fixtures on the shafts.
2. Understand where the fixtures can be mounted.
3. Demonstrate the proper mounting of the TD's.

Mounting the fixtures & TD's

The shaft system can be mounted to the shafts using the standard "V" bracket chain fixtures, the magnetic bases in the *Fixturlaser Shaft*^{200} *System*, optional narrow chain fixtures or optional thin magnetic fixtures. The system can be affixed to shafts themselves or to any portion of the coupling which is not flexible.

Typically, you will designate the driven machinery element to be stationary. The driver will be movable. The TD's (transmitter/detector) are the sensors that actually measure misalignment. The TD marked as "stationary" must be mounted to the stationary shaft or coupling hub. The TD labeled "movable" is mounted on the movable shaft or coupling.

VIBRALIGN

Shaft Alignment with the Shaft^{100} & Shaft^{200} Systems

Mounting fixtures and TD's

❶ **Affix the TD posts to the "V" mounting brackets.**

☐ *Tighten posts with the wrench supplied with the system.*

❷ **Insert the chains through the underside of the "V" bracket.**

Figure 2- 1

Mounting fixtures and TD's

❸ **Affix the "V" brackets to the shafts**.

- ☐ *Use the bracket hook to "catch" the chain.*
- ☐ *The other end of the chain goes under the shaft and will fit into the bracket cradle to secure the bracket to the shaft.*

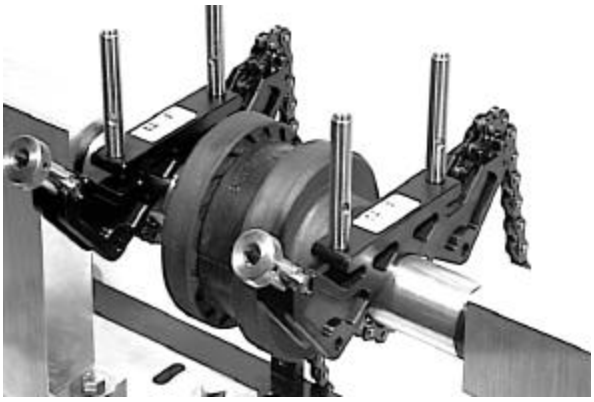

Figure 2- 2

Shaft Alignment with the Shaft100 & Shaft200 Systems

Mounting fixtures and TD's

❹ **Affix the TD's to the posts.**

- ☐ *The TD-Movable is mounted to the movable shaft.*
- ☐ *The TD-Stationary is mounted to the stationary shaft.*

Figure 2- 3

Connecting the cables

❶ **Connect the cables to the TD's.**
❷ **Connect the cables to the display unit.**

☐ *There are two connectors on each TD.*
☐ *Connect in "parallel" – one cable from each going back to the display unit, or "series" – cable from td to td and one back to display.*

Figure 2- 4

Activity 1: Mounting the fixtures, TD's, and connecting cables

Activity 1 Instructions:

1. Mount the posts to the "V" brackets.
2. Affix the brackets to the shafts.
3. Affix the TD's to the posts.
4. Connect the cables from TD's to the display unit.

Activity 1 Discussion:

1. What would you do if there is not enough shaft exposed to mount the fixtures on the shaft?

2. Can you mount to the shaft on one side of the coupling and to the coupling hub on the other?

3. Will your readings be less accurate if you mount on the coupling hubs?

4. Does it matter which TD is attached to a specific machine element?

5. Can you connect the cables incorrectly?

Lesson 2: Configuring the display unit & the shaft alignment program

Lesson 2 Objectives:

At the conclusion of this module the student shall be able to:

1. Demonstrate how to configure the system for shaft alignment.

Configuring the display unit & the shaft alignment program

The display unit configurations involve “global” settings. For instance, you select metric or inches from the main menu tool box. If inches are selected globally, every program will measure in imperial units.

You can also configure each program and select settings that are used exclusively from within the program. For instance, you can set the measurement resolution for measuring shaft alignment from within that program.

Shaft Alignment with the Shaft100 & Shaft200 Systems

Configure the display unit

❶ **Turn on display unit.**
❷ **From the main menu, touch to access this screen:**

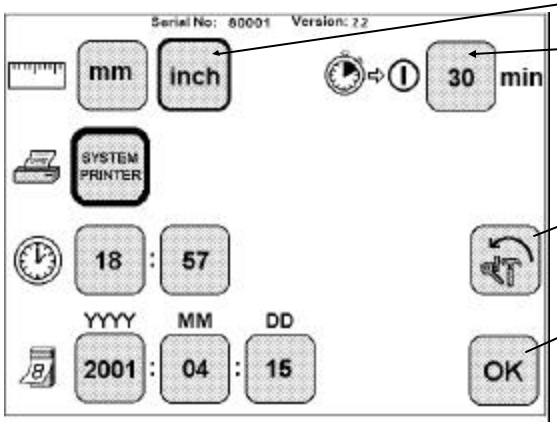

Set to inches

Auto time off setting

Resets to factory defaults (mm, 15 min, not to exit)

Saves settings and returns to main menu

Figure 2- 5

Entering and configuring program 1.

❶ **From the main menu select program 1.**
❷ **Touch to access this screen:**
❸ **Touch to configure.**

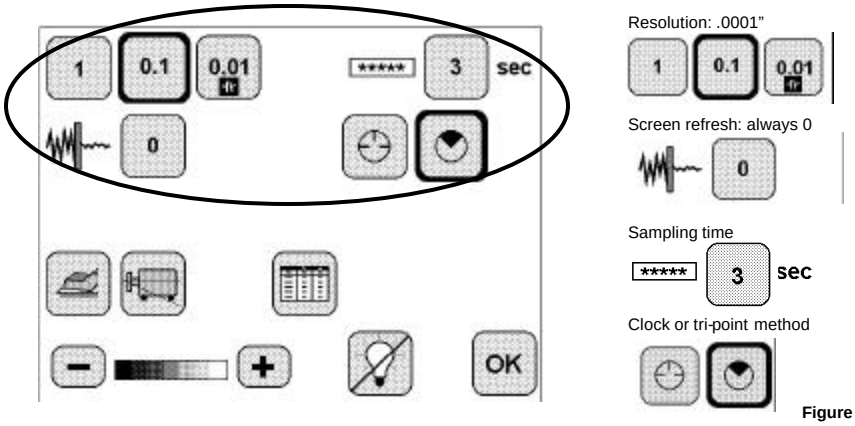

Figure 2- 6

Activity 2: Configuring the display unit & the shaft alignment program

Activity 2 Instructions:

1. From the main menu, configure the display unit.

2. From the shaft alignment program, configure the program. Set the resolution, the measuring method, and set filtering to 3 seconds.

Activity 2 Discussion:

1. What would happen if the resolution is set to 1?

2. Why would you set the filtering to a higher value?

Lesson 3: Entering dimensions & aiming the lasers

Lesson 3 Objectives:

At the conclusion of this module the student shall be able to:

1. Identify the four measurements required to perform shaft alignment.
2. Demonstrate entering the dimensions properly.
3. Demonstrate aiming the lasers.

Entering dimensions and aiming lasers

You will need to enter the dimensions between the TD's (A), the distance from the TD-M to the front feet (B), and the distance between feet (C). These values are used to make the alignment calculations. The dimensions are entered in inches and decimally to two places. For example, 5 and 3/4" could be entered as 5.75. The "A" dimension is the most critical and only requires measurements to the nearest 1/10". If you are accustomed to measuring to the nearest 1/8", that is acceptable. Measure to the nearest 1/8 and round the value to the nearest 1/10". For example: 8.125 would be entered as 8.2 or 8.3. The system will display those as 8.20 or 8.30. The "D" dimension is entered automatically as 1/2 of the dimension you enter as "A". This value needs to be changed if the brackets are not equally spaced form the center of the coupling.

Shaft Alignment with the Shaft^{100} & Shaft^{200} Systems

Measuring & entering dimensions.

❶ **Dimensions are measured as follows:**

- ☐ *A: distance between post centers or center's of chains.*
- ☐ *B: distance from TD-M post center to center of front feet.*
- ☐ *C: distance between feet.*
- ☐ *D: distance from TD-M post center to center of coupling (defaults to ½ of "A" but can be edited)*

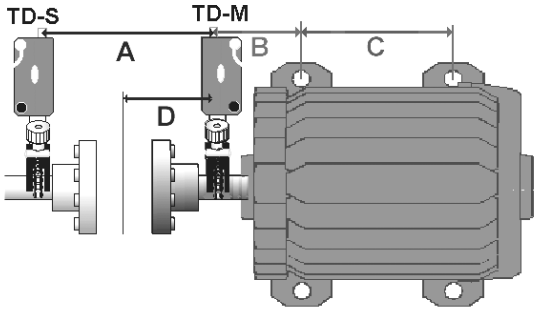

Figure 2- 7

Measuring & entering dimensions.

❷ **Touch the dimension to enter.**

☐ *Keypad appears, enter the dimension to the nearest 1/10th inch.*

☐ *Press OK to enter the dimension.*

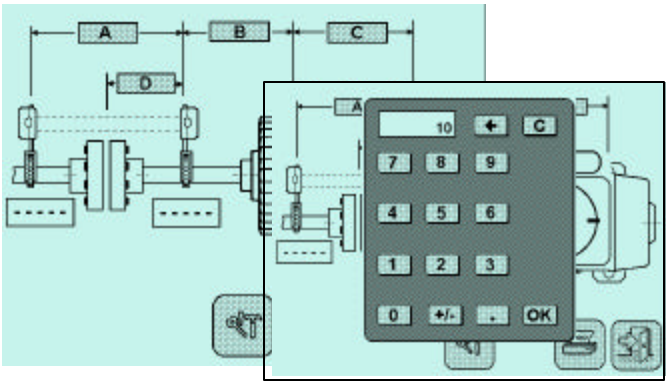

Figure 2-8

Shaft Alignment with the Shaft100 & Shaft200 Systems

Measuring & entering dimensions.

❸ **Check your entries.**

☐ *The dimensions may be re-entered if you make a mistake.*

☐ *"D" defaults to 1/2 "A". You may change the value.*

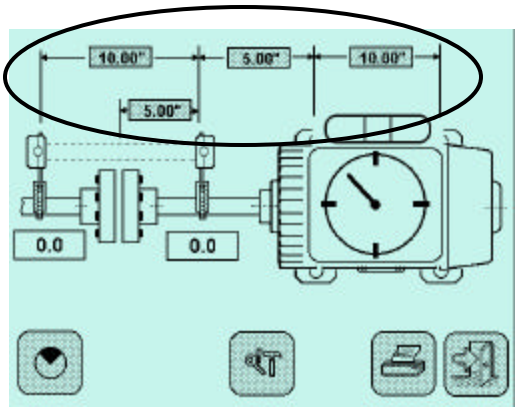

Figure 2-9

Aiming the lasers

❶ **Close the targets.**
❷ **Use the blue thumbscrews on the back of TD's to aim the lasers to the crosshair centers.**
❸ **There are two lasers to aim.**

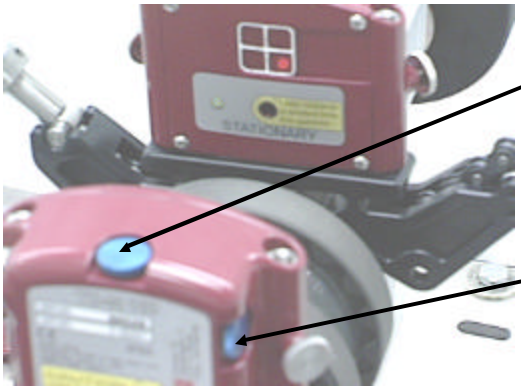

Figure 2- 10

Activity3: Entering dimensions & aiming lasers

Activity 3 Instructions:

1. Measure and enter dimensions A, B, & C.
2. Measure & re-enter dimension "D" if necessary.
3. Aim the lasers to centers of crosshairs.

Activity 3 Discussion:

1. Of all the dimensions, which needs to be the most accurate ?

2. Why would you need to re-enter dimension D?

3. When aiming the lasers, do the lasers have to be perfectly at the target centers?

Unit 3

Measuring & correcting soft foot with the *Fixturlaser Shaft System*

Soft Foot Activities
Lesson 1: Measuring & Correcting soft foot

Required Materials:
(1) Shaft alignment demonstrator
(1) *Fixturlaser Shaft System*
(1) Box of “A” size shims

Lesson 1: Measuring & correcting soft foot

Lesson 1 Objectives:
At the conclusion of this module the student shall be able to:
1. Demonstrate the ability to measure & correct soft foot.

Measuring & Correcting Soft Foot

Soft foot was discussed previously in the pre-alignment unit. Again, soft foot occurs when machine feet do not rest flatly on the machine base. To reiterate, the bad effects of soft foot are that bearings become misaligned, bearing clearances change, and the machine rotational center is moved. Precision alignment is nearly impossible to perform unless soft foot is corrected.

The *Fixturlaser Shaft System* has a soft foot function that calculates the approximate lift at the feet as bolts are loosened and then retightened. This process is done by checking one foot at a time. Gross soft foot should always be corrected before using the soft foot function.

If the foot has an angular relationship to the base, you can correct this by cutting a partial shim to make up the angular correction. When cutting partial shims from pre-cut stock, always leave the shim “tab” intact. The tab can be used to make each shim pile organized and the partial shim will return to the original position. Never “feather” shims out to fix an angled foot. It is unlikely that the angular correction will be duplicated when shim piles are changed are during the alignment.

VIBRALIGN

Shaft Alignment with the Shaft^{100} & Shaft^{200} Systems

Measuring soft foot

❶ **Rotate TD’s to 12:00.**
❷ **Touch to access the toolbox.**

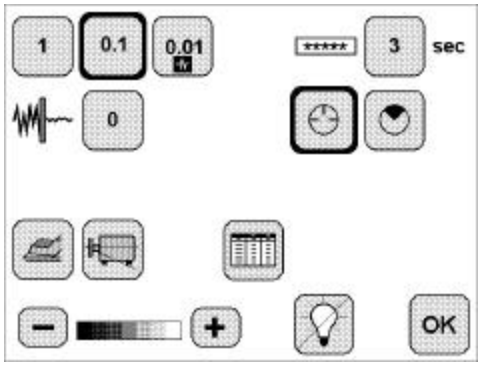

Figure 3- 1

Measuring soft foot

❸ **Touch to access the softcheck program.**

☐ *Gross soft foot should have been checked in pre-alignment process.*

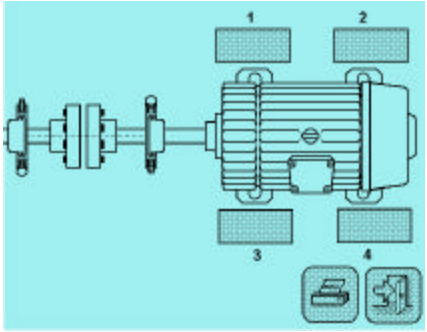

Figure 3- 2

Shaft Alignment with the Shaft100 & Shaft200 Systems

Measuring soft foot

❹ **Touch for the foot you want to measure.**

☐ *Wait for the value to read zero.*

❺ **Loosen and re-tighten the bolt.**

❻ **Touch OK to record the soft foot value.**

☐ *This is the amount the foot lifts when the bolt is loosened.*

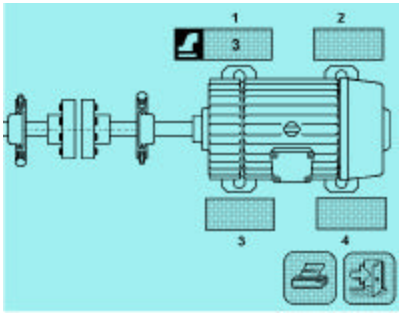

Figure 3- 3

Shaft Alignment with the Shaft100 & Shaft200 Systems

Measuring soft foot

❼ **Finish the soft foot check by measuring the other feet.**

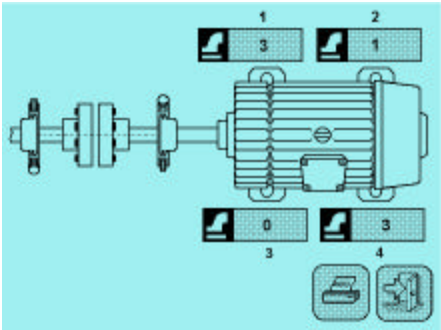

Figure 3- 4

Shaft Alignment with the Shaft100 & Shaft200 Systems

Correcting soft foot

❶ **Start at the foot with greatest value.**
❷ **Shim the foot with the actual value registered.**
❸ **Re-measure.**
❹ **Correct until all feet are 2 mils or less.**

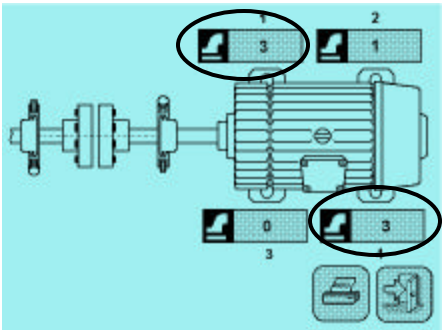

Example:

- You will add 3 mils to either of these two feet.
- Re-check the foot.
- If the shim adjustment results in very little or no change, then most likely, an angled foot is the cause.

Figure 3- 5

Activity & Discussion 1: Measuring and correcting soft foot

Activity 1 Instructions:

1. Using the process outlined in this lesson, measure and correct soft foot on your demonstrator.

Activity 1 Discussion:

1. What do the soft foot numbers represent?

2. Will the value always represent the actual soft foot amount? Why?

3. Why did you correct gross soft foot during pre-alignment?

4. What could cause a soft foot correction to result in little or no change when re-measured?

5. How could you resolve this problem?

Unit 4

Measuring, evaluating & correcting misalignment with the tri-point method.

Measuring, evaluating, & correcting activities
Lesson 1: Things to know before you measure
Lesson 2: Measuring misalignment
Lesson 3: Evaluating misalignment
Lesson 4: Correcting misalignment
Lesson 5: Using the tri-point method to measure, evaluate, and correct misalignment

Required Materials:
(1) Shaft alignment demonstrator
(1) *Fixturlaser Shaft System*
(1) Box pre-cut shims (size A)

Lesson 1: Things to know before you measure

Lesson 1 Objectives:

At the conclusion of this module the student shall be able to:

1. Describe the precision measurement process.
2. Describe the clock positions used by the *Fixturlaser Shaft System.*
3. Describe how the *Fixturlaser Shaft System* presents measurement results (positive and negative values).

Fixturlaser Shaft System: **inclinometer, clock positions and measurement results**

The *Fixturlaser Shaft System* uses an internal inclinometer to determine at which clock positions the TD's are. Clock positions are established as you look ***from*** the movable element ***to*** the stationary element. From this perspective: 9:00 is on your left, 3:00 is on your right; 12:00 is at the top and 6:00 at the bottom.

The alignment results present the position of the movable element in relation to the stationary element. Positive values indicate that the movable machine is high or away from you. Negative values indicate the movable machine is low or towards you.

Shaft Alignment with the Shaft^{100} & Shaft^{200} Systems

Before measuring:

❶ Clock positions

- *Clock positions are based on the user facing (looking to) the stationary machine.*
- *The stationary shaft is the reference.*

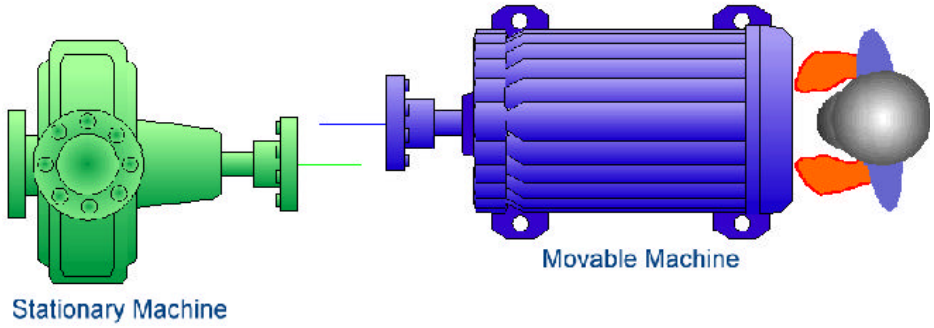

Figure 4- 1

Before measuring:

❷ The Inclinometer

- *The inclinometer indicates the position of the TD's.*

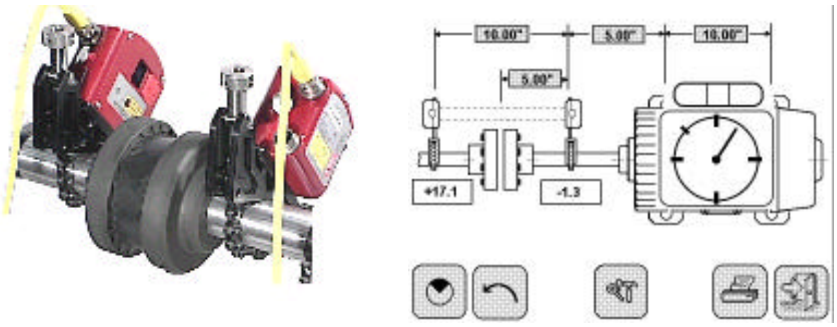

Figure 4- 2

VIBRALIGN
Shaft Alignment with the Shaft100 & Shaft200 Systems

Before measuring:

❷ The Inclinometer

- *The bubble will appear when you are close to 9:00,12:00,3:00, or 6:00.*
- *The Td's are "level" when the bubble is mostly between the lines.*

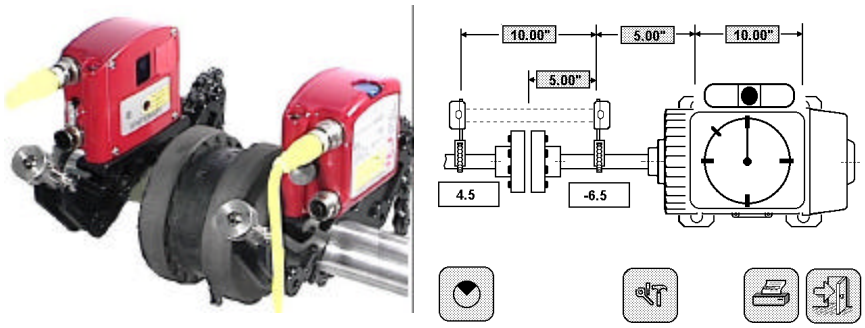

Figure 4- 3

Before measuring:

❸ Measuring results.

- *Results* present the *position* of the movable element in relation to the stationary element.
- *Positive values mean that the movable machine is high or away from you.*
- *Negative values mean that the movable machine is low or towards you.*

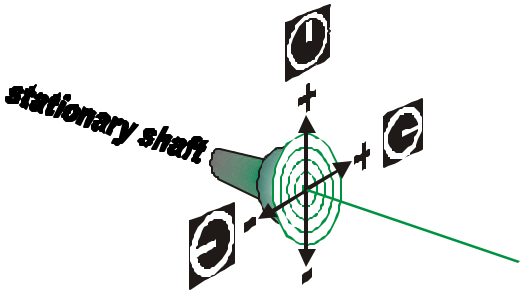

Figure 4- 4

Activity 1: Before you measure

Activity 1 Instructions:

1. On the alignment demonstrator, rotate the TD's to 9:00 and level them.
2. Rotate the TD's to 12:00 and level them.
3. Rotate the TD's to 3:00 and level them.

Activity 1 Discussion:

1. Based on the information you learned in this lesson, 9:00 will be on your right as you look from behind the movable machine at the stationary machine. true or false?

2. You are standing beside the two machines, with the motor on your right. Will 9:00 be on the side you are standing or the opposite side?

3. Positive alignment results could mean the movable element is low. true or false?

Lesson 2: Measuring misalignment (tri-point method)

Lesson 2 Objectives:

At the conclusion of this module the student shall be able to:

1. Demonstrate the shaft alignment (tri-point method) measuring process using the *Fixturlaser Shaft System*.

Measuring misalignment (tri-point method)

The *Fixturlaser Shaft System* has two measuring methods: the clock method and the tri-point method. In this activity you will use the tri-point method. In the tri-point method, the *Fixturlaser Shaft System* calculates machinery positions from as little as 60 degrees of rotation. Accuracy is improved by making 180 degrees of rotation.

Measurements will be taken at three positions. The measure button is touched to register alignment values. The TD value blocks show asterisks while the system is sampling. Make sure the asterisks have cleared before you rotate the shafts to the next position. If you have configured the program for a 3 second sampling time (in the tool box), you will wait 3 seconds before rotating the TD's to the next position.

Results are presented after the third measurement. The results will only be "live" if the TD's are at true vertical (12:00 or 6:00) or horizontal (9:00 or 3:00) positions. The results always present the position of the movable element in relation to the stationary element regardless of TD position.

VIBRALIGN

Shaft Alignment with the Shaft^{100} & Shaft^{200} Systems

Tri-Point Method :

- ☐ *In tri-point method, machinery positions are calculated with as little as 60 degrees of rotation.*
- ☐ *The data is not always "live".*

Clock Method

- ☐ *In clock method, machinery positions are calculated after 180 degrees of rotation.*
- ☐ *The data is always "live".*

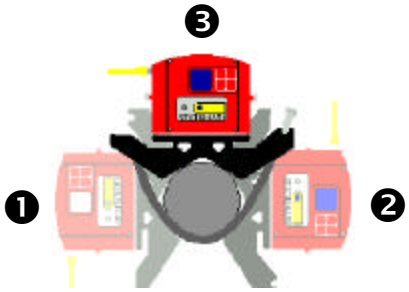

Figure 4- 5

Configuring for the Tri-Point Method :

❶ From within the shaft alignment program, access the tools menu.
❷ Touch to configure for the tri-point method.

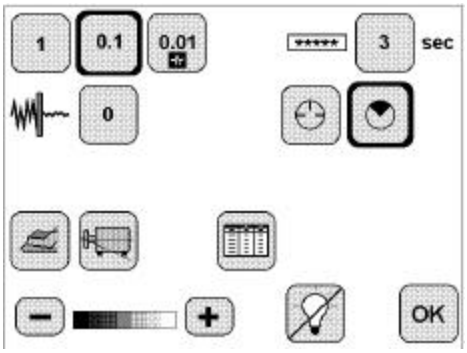

Figure 4- 6

Measuring Misalignment:

❶ You may start with the TD's at <u>any</u> clock position.
- *Always sweep as much as possible (up to180 degrees).*

❷ Aim the lasers to centers of crosshairs.
❸ Open detector covers.
❹ Touch to register reading.
- *The symbol will disappear until you have rotated enough to register the next reading.*

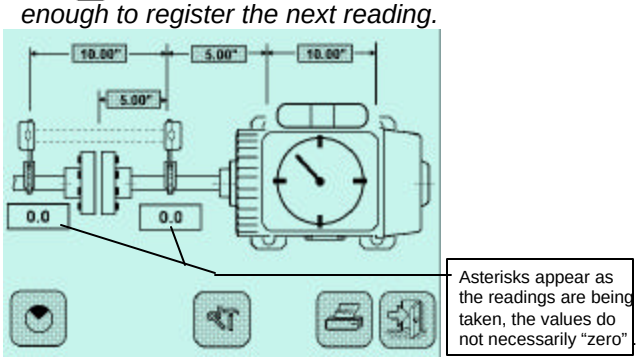

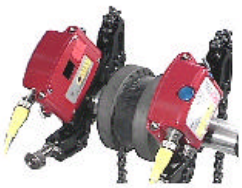

You can start at any position.

But if it is possible to make 180 degrees of rotation, it might be a good practice to start at 9:00.

Figure 4- 7

Measuring Misalignment:

❺ Rotate the TD's <u>at least</u> 30 degrees.

- *The symbol will re-appear when you rotate enough.*
- *Rotate as much as you can (up to 90 degrees).*

❻ Touch to register readings.

- *The points where you have measured are marked on the inclinometer.*

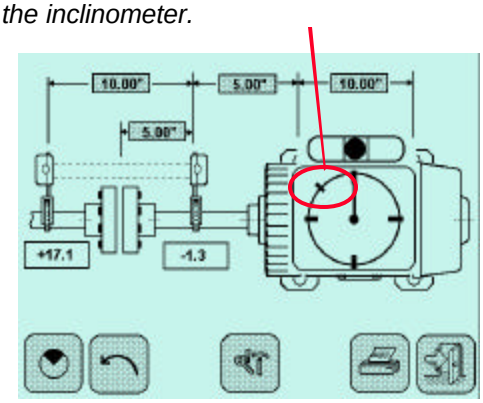

Figure 4- 8

Shaft Alignment with the Shaft[100] & Shaft[200] Systems

Measuring Misalignment:

❼ Rotate the TD's again.

- *30 degrees minimum, but 90 if possible.*

❽ Touch to register readings.

This might be a possible ending point.

But if it is possible to make 180 degrees of rotation, it would be desirable to end at 3:00.

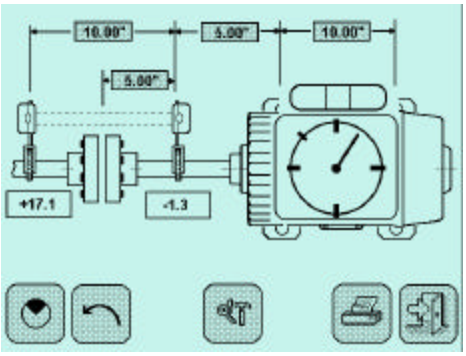

Figure 4- 9

Activity 2: Measuring misalignment (tri-point method)

Activity 2 Instructions:

1. Make sure the system is configured for tri-point method.

2. On the alignment demonstrator, use the tri-point method to measure the misalignment.

Activity 2 Discussion:

1. How do you know that the measurements have been registered?

2. After the readings have been registered how do you know that you have made enough rotation to register at the next point?

3. Did you notice the diagonals in the upper right hand corners of the results?

4. Can you think of what the diagonals may mean?

Lesson 3 Objectives:

At the conclusion of this module the student shall be able to:

1. Identify the vertical angular & offset misalignment values from the DU.
2. Identify the horizontal angular & offset misalignment values from the DU.
3. Compare the angular and offset results to a tolerance table to determine whether corrections are necessary.

Evaluating Alignment Results

Alignment is evaluated by comparing the angular & offset misalignment data to tolerances for a selected machinery rpm. The angular and offset alignment data is found under the coupling on the shaft alignment screen. You need to satisfy the tolerances for both the vertical and horizontal data. If the angular and offset data are *both* acceptable vertically, then you will evaluate the horizontal data. If either are unacceptable, a correction will be made.

VIBRALIGN

Shaft Alignment with the Shaft[100] & Shaft[200] Systems

Evaluating Results:

❶ The horizontal results are presented first.

- *The motor icon shows four feet indicating a "top view".*
- *If diagonals appear in the results, that indicates that the values are NOT "live".*

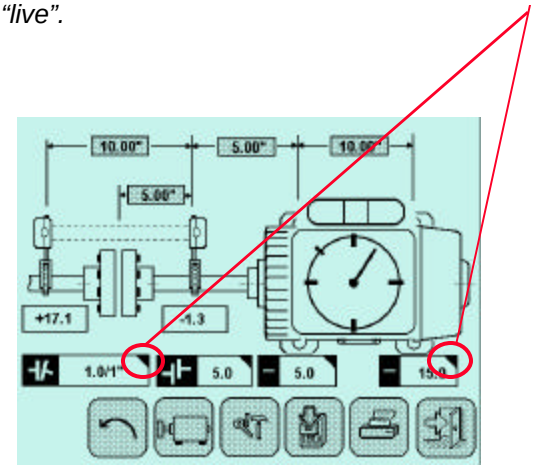

Figure 4- 10

Evaluating Results:

❷ Touch to see the vertical results.

- *The motor icon shows two feet indicating a "side view".*
- *You do not need to rotate the TD's to see the vertical results.*

❸ You may touch to see the horizontal results again.

- *You can toggle back and forth to change views.*

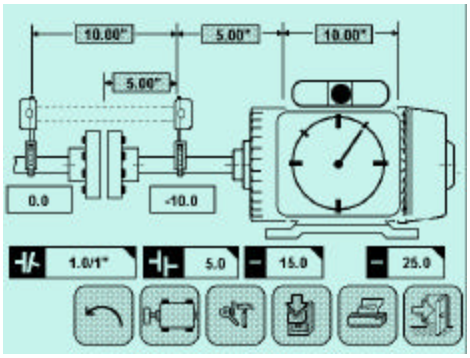

Figure 4 - 11

Shaft Alignment with the Shaft[100] & Shaft[200] Systems

Evaluating Results:

❹ Angle and offset values are used to determine the alignment quality.

- *Compare them to alignment tolerances to determine whether correction is necessary.*

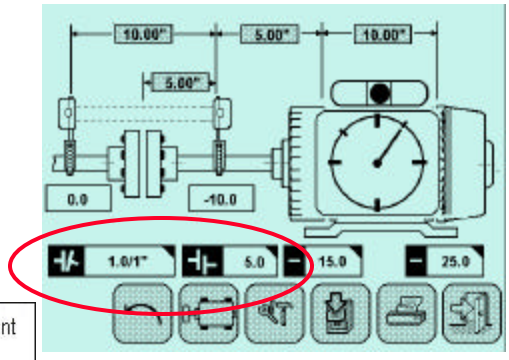

	Angular Misalignment mils/inch		Offset Misalignment mils	
RPM	Excellent	Acceptable	Excellent	Acceptable
3600	0.3/1"	0.5/1"	1.0	2.0
1800	0.5/1"	0.7/1"	2.0	4.0
1200	0.7/1"	1.0/1"	4.0	6.0
900	1.0/1"	1.5/1"	6.0	6.0

- ***You must satisfy the tolerances both vertically and horizontally.***

Figure 4 - 12

Activity 3: Evaluating misalignment (tri-point method)

Activity 3 Instructions:

1. In the last activity you measured misalignment.

2. Record the vertical angle and offset results

3. Record the horizontal angle and offset results.

Activity 3 Discussion:

1. How do you know if you are looking at vertical or horizontal results?

2. How do you change the view from horizontal to vertical?

Given this screen display, answer the following questions:

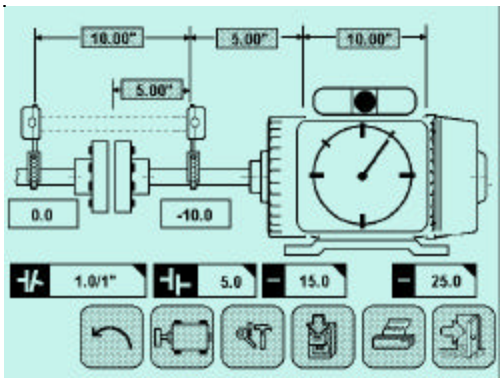

3. The screen indicates you are looking at vertical or horizontal results? (circle one)

4. The TD's would be at which position?

5. The angular misalignment value is?

6. Is this acceptable if the machine rpm is 1800? Yes or No

7. The offset misalignment value is ?

8. The angle and offset values are used for what purpose?

Lesson 4 Objectives:

At the conclusion of this module the student shall be able to:

1. Determine the correction requirements for vertical & horizontal misalignment.
2. Understand the difference between “coupling values” and foot values.
3. You will be able to communicate how the coupling values and foot values relate.
4. You will know the proper TD positions for correcting vertical and horizontal misalignment.

VIBRALIGN

Shaft Alignment with the Shaft[100] & Shaft[200] Systems

Correcting Misalignment:

❶ Correct vertical misalignment.

- *TD’s can be anywhere.*
- *Touch to see the vertical results.*
- *Diagonals will indicate that the values are not live.*

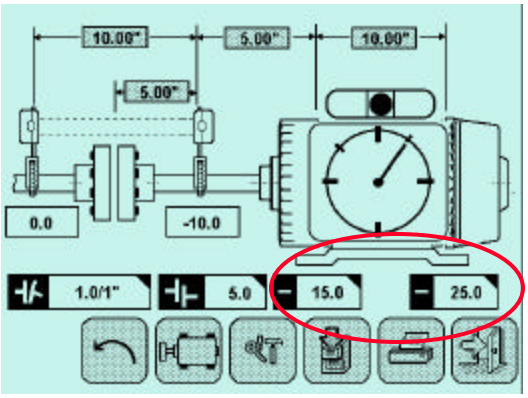

- *Positive values at the feet mean the movable machine is high, therefore you will remove shims.*
- *Negative values mean the movable machine is low, so you will add shims.*

Figure 4 - 13

Correcting Misalignment:

❷ Correct horizontal misalignment.

- *Rotate TD's to 3:00, if possible.*
- *Touch*
- *Motor icon shows four feet indicating a top view.*
- *Move the machine horizontally watching the foot values.*

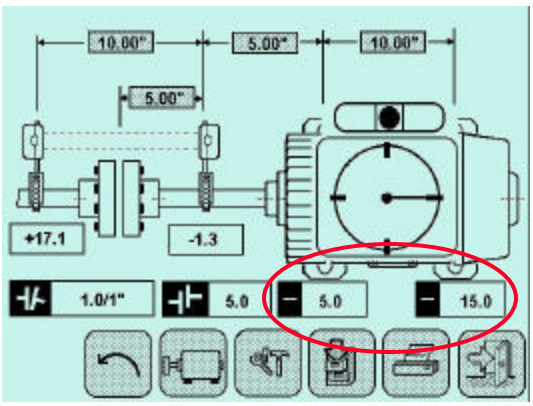

- *Negative values mean that the machine is towards you and needs to move away from you.*
- *Positive values mean that the machine is away from you and needs to come toward you.*
- *As foot values become small, glance at angle and offset icons to determine alignment quality.*

Figure 4- 14

Activity 4: Correcting Misalignment

Activity 4 Discussion:

Given this screen display, answer the following questions.

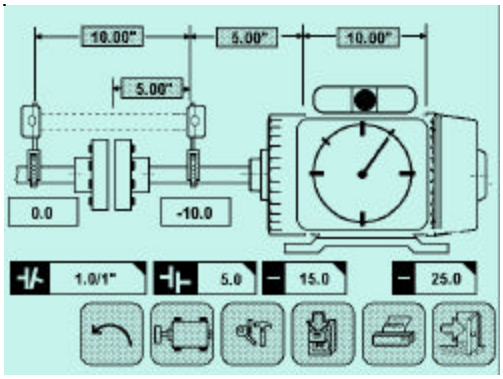

1. Specifically what would you do to correct the misalignment?

2. After you make a vertical correction, what is the next corrective step?

Lesson 5 Objectives:

At the conclusion of this module the student shall be able to:

1. Demonstrate how to measure misalignment using the tri-point method.
2. Evaluate the alignment quality for a particular rpm.
3. Demonstrate the correction of both vertical & horizontal misalignment.
4. Make alignment corrections to satisfy tolerances for an 1800 RPM machine.

VIBRALIGN

Shaft Alignment with the Shaft^{100} & Shaft^{200} Systems

Precision Alignment Process:

❶ Measure

- *Find out where the movable element is in relation to the stationary element.*

❷ Evaluate

- *Determine whether the alignment is acceptable.*
- *Angular and Offset Misalignment are compared to the tolerances.*
- *Machines must be in tolerances both vertically and horizontally.*

❸ Correct

- *Corrections are made if the tolerances are not satisfied.*
- *Use foot values to make corrections.*

❹ Re-measure

- *Use the re-measure button.*

❺ Document results

Figure 4- 15

Repeating the Process:

❶ **Re-measure misalignment**

- *Press backward arrow.*
- *Confirm the re-measure prompt to clear alignment data.*
- *Repeat the measurement process.*

❷ **Evaluate**

❸ **Correct (if necessary)**

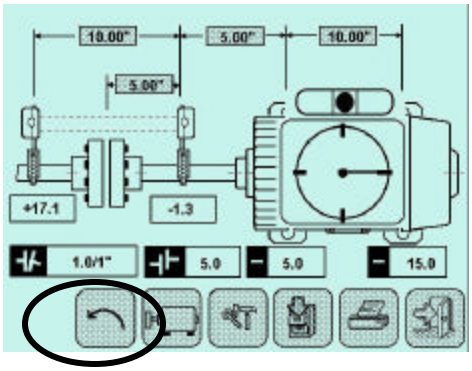

Figure 4- 16

Activity 5 Instructions:

On the alignment demonstrator,

1. Re-measure misalignment.
2. Evaluate both the vertical and horizontal alignment quality. Use the tolerances for 1800 rpm.
3. Correct the vertical misalignment.
4. Correct the horizontal misalignment.
5. Re-measure, evaluate misalignment, and correct again if necessary.
6. Repeat the process until you achieve excellent alignment in both the horizontal and vertical directions.

Activity 5 Discussion:

1. Why might you need to make more than one move to satisfy the alignment tolerances?

2. If it takes more than 3 corrections what is your most likely problem?

Unit 5

Saving & printing data.

Saving & printing data
Lesson & Activity 1: Saving data
Lesson & Activity 2: Screen printing
Lesson & Activity 3: Printing from memory

Required Materials:
(1) Shaft alignment demonstrator
(1) *Fixturlaser Shaft System*
(1) System printer

Lesson 1 Objectives:

At the conclusion of this module the student shall be able to:

1. Save data to memory

Saving data

The *Fixturlaser Shaft System* provides memory to save 100 files. The system temporarily stores data when the measurement registration keys are touched. Therefore, to save final data after corrections have been made, you must re-measure to get the final data into the temporary memory. After re-measuring, you store the data permanently by assigning the data to a file. The file can be downloaded into the Documenter Software to print from your PC, or you may print directly from the DU with the System Printer.

Shaft Alignment with the Shaft^{100} & Shaft^{200} Systems

Saving data

❶ **To save final data you must re-measure.**
- ☐ **If you do not re-measure, you will save data gathered before you make your final corrections.**

❷ **From the shaft alignment screen, touch .**

❸ **To name the file, touch here.**

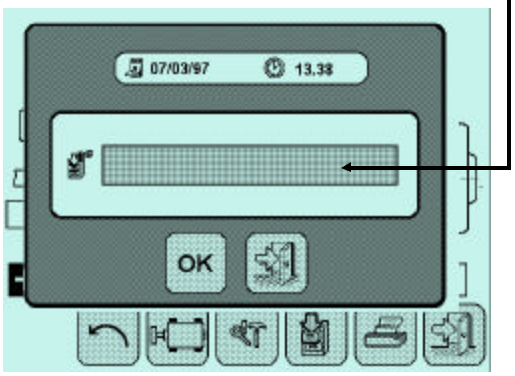

Figure 5- 1

Saving data

❹ **Enter the machine name using the keypad.**
❺ **Touch OK .**

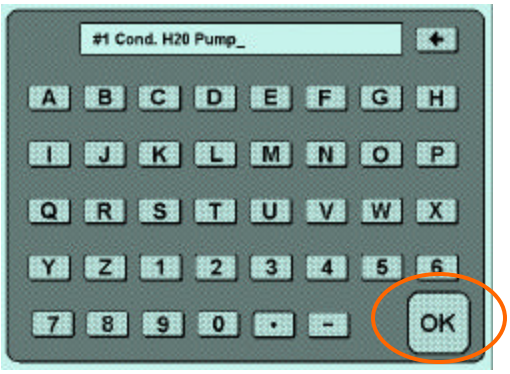

Figure 5- 2

Shaft Alignment with the Shaft100 & Shaft200 Systems

Saving data

❻ **Verify that the name is correct.**
❼ **Touch OK .**

- ☐ *Saved data may be printed from the display unit.*
- ☐ *Saved data may be down-loaded to a computer.*
- ☐ *To view the saved data, you exit program one and enter the file program from the main menu.*

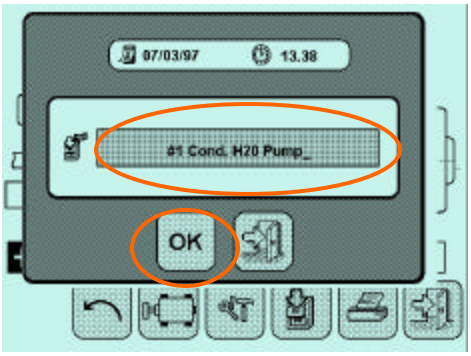

Figure 5- 3

Activity 1: Saving data

Activity 1 Instructions

1. Re-measure for final alignment data on your classroom demonstrator.

2. Save the data using the file name: class1

Activity 1 Discussion

1. Why do you need to re-measure before saving final data?

2. What will you do to view the saved data in your display unit?

Lesson 2 Objectives:

At the conclusion of this module the student shall be able to:

1. Print final alignment data from the shaft alignment program.

Screen printing

You can screen print from the job-site. Again, remember you should always re-measure before printing. The screen print will have to be done twice to get both vertical and horizontal information.

VIBRALIGN

Shaft Alignment with the Shaft^{100} & Shaft^{200} Systems

Screen printing

❶ **You may print final data from within the shaft alignment program.**
- ☐ *You should always re-measure before printing.*

❷ **Connect the system printer.**

❸ **Touch**  **to print the current screen.**

❹ **You will print twice: vertical & horizontal data**.

Figure 5- 4

Activity 2: Screen printing

Activity 2 Instructions:

1. Print the vertical & horizontal screen data

Activity 2 Discussion:

1. Why do you need to print twice?

Lesson 3 Objectives:

At the conclusion of this module the student shall be able to:

1. Access files from memory
2. Print data from the file.

Printing from memory

Shaft Alignment with the Shaft^{100} & Shaft^{200} Systems

Printing from memory

❶ **To print from memory, data must be saved first.**
❷ **From the main menu, touch .**

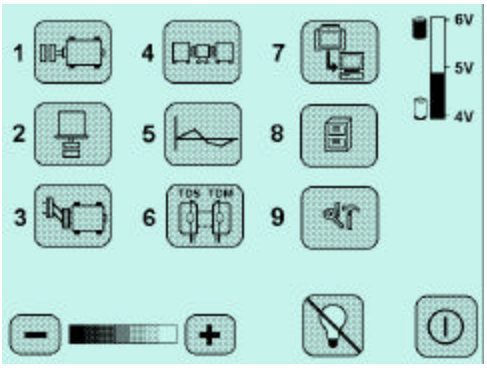

Figure 5- 5

Printing from memory

❸ **Find the file you want to open.**

☐ *The scroll arrows appear if you have 10 or more files in memory.*

❹ **Touch the file you want to open.**

❺ **Touch to open the file.**

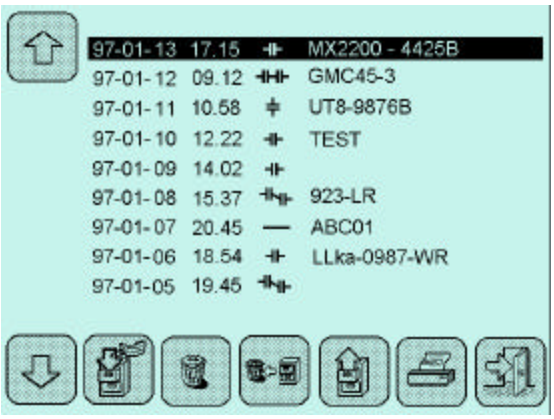

Figure 5- 6

Shaft Alignment with the Shaft100 & Shaft200 Systems

Printing from memory

❻ **Vertical and horizontal data is saved.**

❼ **Touch to print the data.**

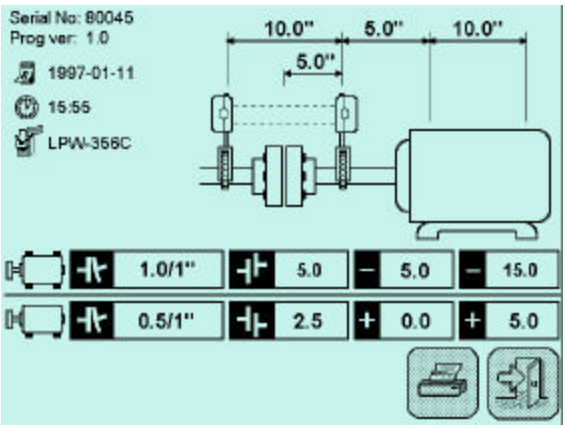

Figure 5- 7

Activity 3: Printing from memory

Activity 3: Instructions

1. Access the file you saved in Activity 1.
2. Print the file with the system printer.

Activity 3: Discussion

1. How does this data compare to the data you printed in the last activity?

Unit 6

Solutions to base-bound & bolt-bound situations.

Solutions to base-bound & bolt-bound situations.
Lesson & Activity 1: Base-bound & bolt-bound concepts
Lesson & Activity 2: Base-bound & bolt-bound solutions with the *Fixturlaser Shaft System.*

Required Materials:
(1) Shaft alignment demonstrator
(1) *Fixturlaser Shaft System*

Lesson 1: Base-bound & bolt-bound situations

Lesson 1 Objectives:

At the conclusion of this module the student shall be able to:

1. Discuss alternative solutions to base-bound or bolt-bound situations .

Base-bound & bolt-bound

Often an alignment can not be made at the “movable” feet. It is not unusual to find that there are not enough shims to remove to correct the vertical misalignment. Therefore, the machine is considered “base-bound”. Similarly, problems are also encountered when making horizontal corrections: “bolt-bound”. When this occurs, you have three viable options: 1. Modify the movable element, 2. Move the stationary element, 3. Leave the machine misaligned. If you consider the “stationary” machine to be potentially movable, there are literally infinite alignment possibilities.

In cases when the stationary element can be moved, the *Fixturlaser Shaft System* will compute alternative solutions. This may be more efficient than elongating bolt holes, undercutting bolts, or milling baseplates.

VIB R ALI GN

Shaft Alignment with the Shaft^{100} & Shaft^{200} Systems

Base-bound condition

- *Describes a situation associated with vertical misalignment.*
- *The movable element is high. There are fewer shims than are required to make the alignment, therefore the machine is base-bound.*

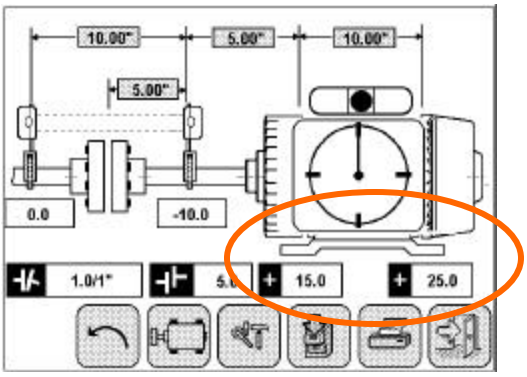

Figure 6 - 1

Base-bound condition

- *This is a graphical representation.*

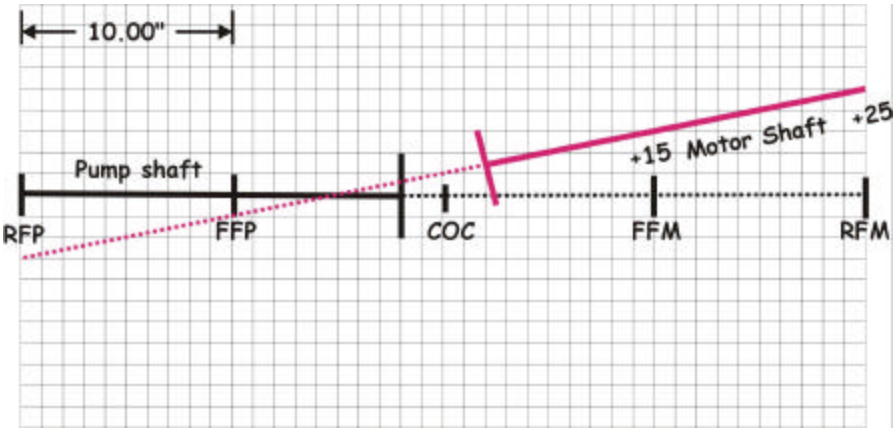

Figure 6 - 2

Shaft Alignment with the Shaft100 & Shaft200 Systems

Base-bound condition

- *One possible solution: Lock the two outboard feet.*

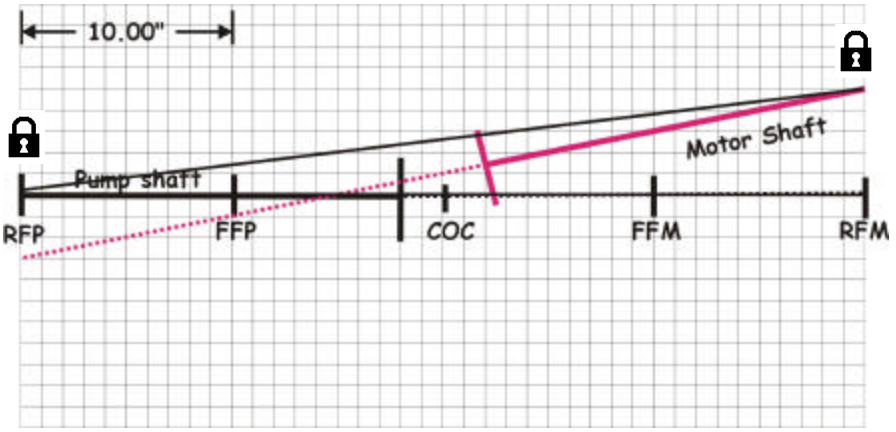

Figure 6 - 3

Base-bound condition

- *The rear feet are locked. Move the inboard pump feet up.*

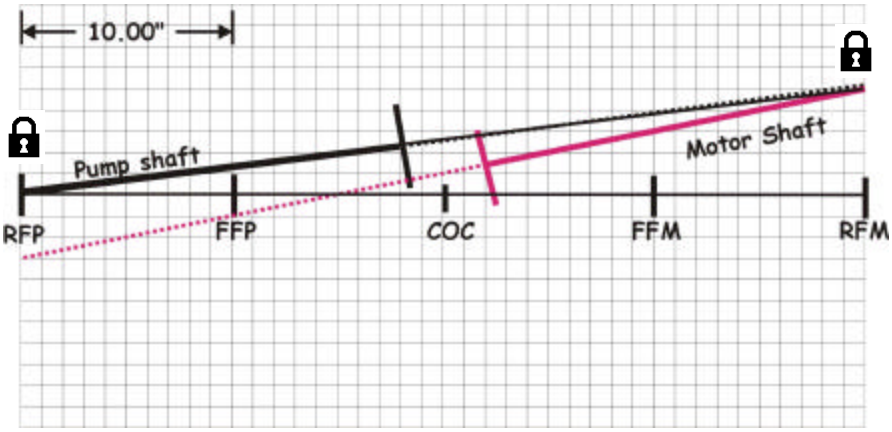

Figure 6 - 4

Shaft Alignment with the Shaft100 & Shaft200 Systems

Base-bound condition

- *Then move the inboard motor feet up. The two shafts would be collinear.*

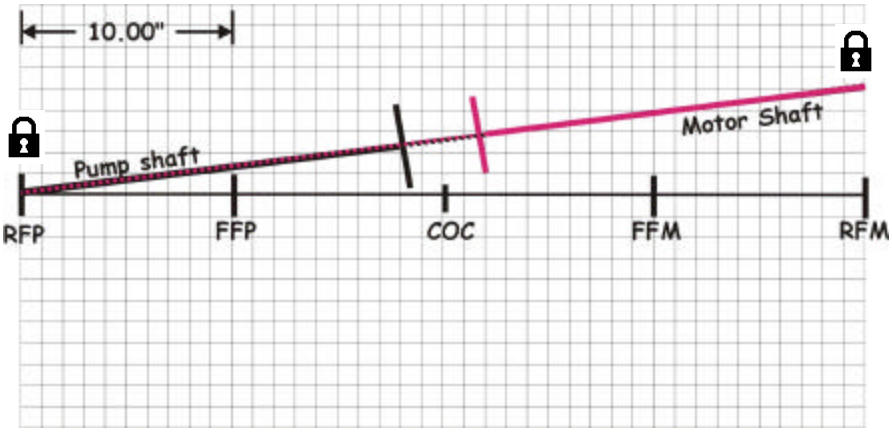

Figure 6 - 5

Activity 1: Solutions to base-bound & bolt-bound situations

Activity 1 Instructions:

The following graph represents a machine which is base bound.

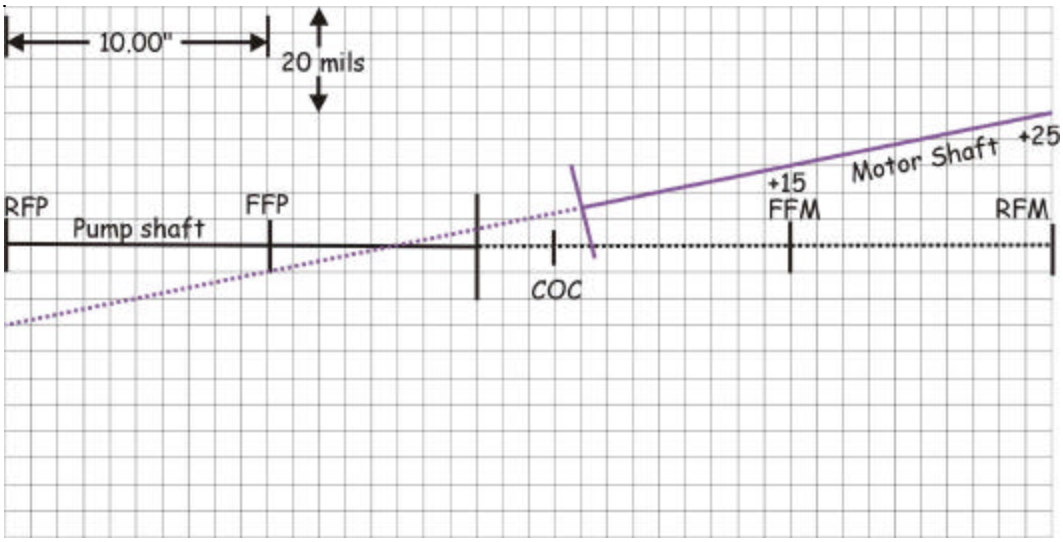

1. On the graph, draw a line between points RFP and RFM to create a reference line.

2. You can see that the front pump feet are below the reference line.

3. You can see that the front motor feet are also below the reference line.

Activity 1 Discussion:

1. How many blocks below the reference line are the front pump feet?

2. If each block represents 5 mils, how low are the front pump feet in relation to the reference line?

3. How low are the motor feet in relation to the reference line?

4. Can this alignment be made with out removing shims from the motor feet?

5. If the alignment is made by adding shims to the front feet of both the pump and the motor, will the shafts be level?

Lesson 2 Objectives:

At the conclusion of this module the student shall be able to:

1. Demonstrate using the *Fixturlaser Shaft System* to solve base-bound or bolt-bound situations .

Base-bound & bolt-bound solutions with the *Fixturlaser Shaft System*

When the stationary element can be moved, the *Fixturlaser Shaft System* will compute alternative solutions. The system will ask you to determine which feet will be static and which will be movable. For example, you could make the “stationary” feet movable and “movable” feet static. Further, you can try several solutions to determine which is the best solution based on your situation. This may be more efficient than elongating bolt holes, undercutting bolts, or milling baseplates.

Shaft Alignment with the Shaft^{100} & Shaft^{200} Systems

Solutions for base-bound condition

☐ ***The TD’s are at 12:00 o’clock.***

❶ From the shaft alignment screen, touch to access the tools menu.

❷ From the tools menu, touch to access alternative solutions.

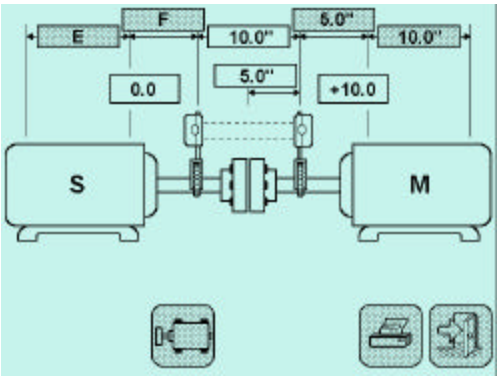

Figure 6 - 6

Solutions to base-bound and bolt-bound situations.

Solutions for base-bound condition

❸ Enter the "E" dimension: the distance between stationary machine bolt centers.
❹ Enter the "F" dimension: the distance from stationary machine front foot to the TD-S post.

☐ *Unlocked locks appear under the feet.*

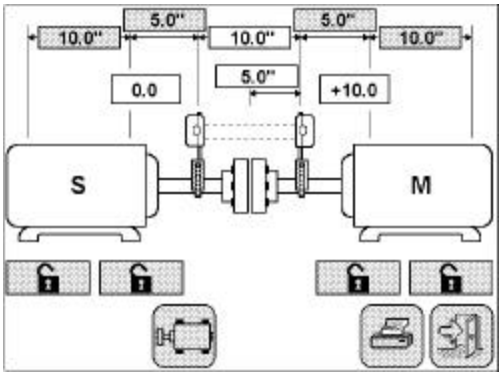

Figure 6 - 7

Shaft Alignment with the Shaft100 & Shaft200 Systems

Solutions for base-bound condition

❺ Lock any two feet by touching under the desired feet.

☐ *In this example, we have locked the two outboard feet.*
☐ *The alignment positions are now shown for the new movable feet.*
☐ *The angular and offset misalignment values are also shown.*

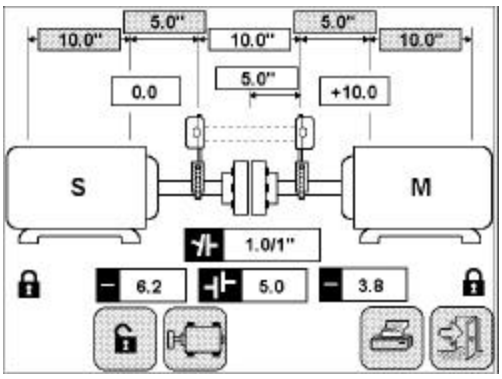

Figure 6 - 8

Solutions for base-bound condition

❻ **You can unlock the feet by touching 🔓.**

☐ *All four feet will again be shown as unlocked.*

❼ **Lock two different feet to see another solution.**

☐ *In this example, the two motor feet are locked.*

☐ *The two pump feet become movable.*

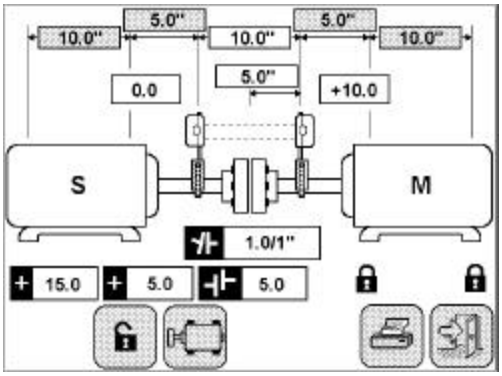

Figure 6 - 9

Shaft Alignment with the Shaft100 & Shaft200 Systems

Bolt-bound condition

☐ *Describes a situation associated with horizontal misalignment.*

☐ *The movable element can not be moved enough because there is insufficient bolt hole clearance. Therefore the machine is bolt-bound.*

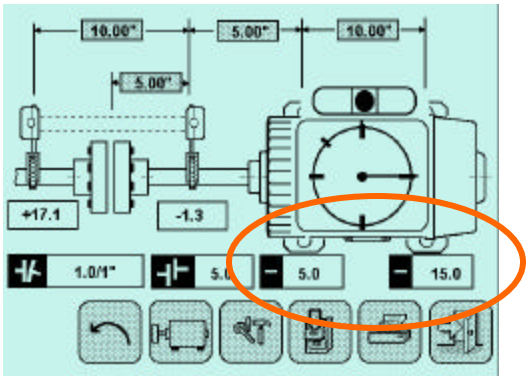

Figure 6 - 10

Bolt-bound condition

- *If the "movable" machine can not be moved enough horizontally because there is insufficient bolt hole clearance, it is bolt-bound.*

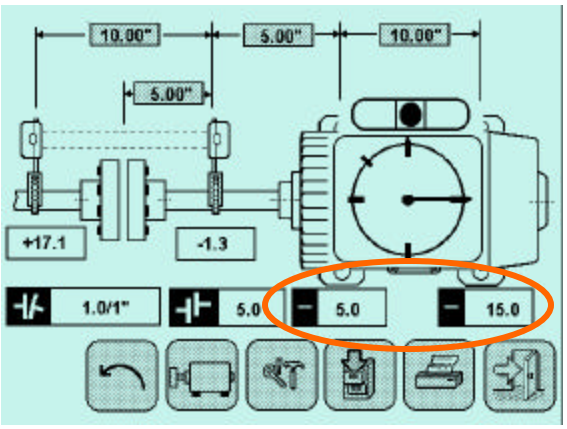

Figure 6- 11

Shaft Alignment with the Shaft100 & Shaft200 Systems

Solutions for bolt-bound condition

- ***The TD's are at 3:00 o'clock.***

❶ From the shaft alignment screen, touch to access the tools menu.

❷ From the tools menu, touch to access alternative solutions.

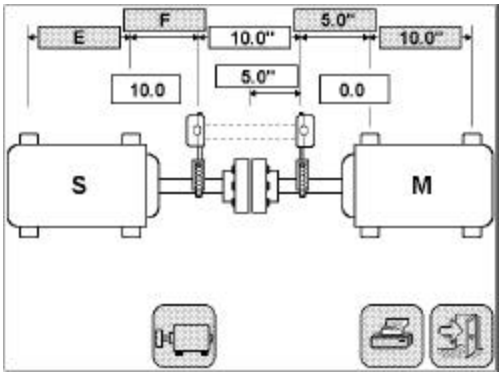

Figure 6- 12

Solutions for bolt-bound condition

❸ **Enter the "E" dimension: the distance between stationary machine bolt centers.**

❹ **Enter the "F" dimension: the distance from stationary machine front foot to the TD-S post.**

☐ *Unlocked locks appear under the feet.*

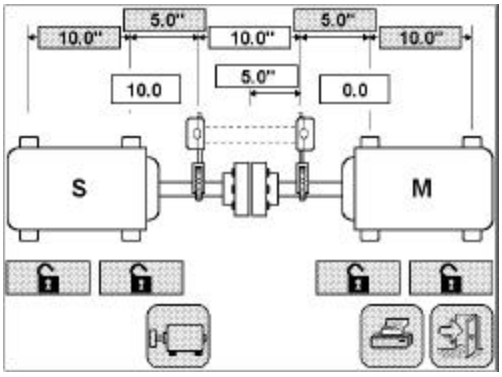

Figure 6 - 13

Shaft Alignment with the Shaft100 & Shaft200 Systems

Solutions for bolt-bound condition

❺ **Lock any two feet by touching under the desired feet.**

☐ *In this example, we have locked the two "movable" element feet.*

☐ *The "stationary" element feet are the new movable feet.*

☐ *The angular and offset misalignment values are also shown.*

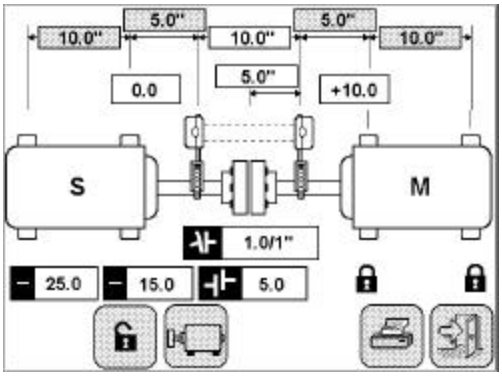

Figure 6 - 14

Solutions for bolt-bound condition

❻ **You can unlock the feet by touching .**

☐ *All four feet will again be shown as unlocked.*

❼ **Lock two different feet to see another solution.**

Figure 6 - 15

Activity 2: Base-bound & bolt-bound solutions and the *Fixturlaser Shaft System*

Activity 2 Instructions:

1. Using either the clock or tri-point method, re-measure the misalignment.

2. Access the alternative solution screen.

3. Lock the movable feet to see the solutions at the “stationary” element.

4. Unlock the feet. Lock the two outboard feet. These are the rear feet of each element.

5. Unlock the feet again. Now, lock the inboard feet.

6. Determine what you believe is the “best solution” (other than the solution that includes the two original movable element feet) and make the correction.

Activity 2 Discussion:

1. If you always “lock” two feet, how many alignment solutions are possible for a two element machine?

2. If you are looking for a solution that only requires adding shims, what sign (+/-) do want to see under the movable feet?

Unit 7

Compensating for dynamic movement.

Compensating for dynamic movement.
Lesson 1: Dynamic movement
Lesson 2: Entering target values at machine feet
Lesson 3: Compensating for desired angle & offset values

Required Materials:
(1) Shaft alignment demonstrator
(1) Shaft System

Lesson 1 Objectives:

At the conclusion of this module the student shall be able to:

1. Explain why some machines are intentionally misaligned.
2. Discuss the difference between growth and targets.
3. Determine target values given growth data.

Dynamic Movement

Some equipment moves from its off-line position when it is operating. The most common cause of this dynamic movement is thermal growth. For example, a 10 inch long piece of carbon steel grows about 6.3 mils when heated 100 degrees Fahrenheit above the ambient temperature. (Coefficient of expansion is (.00000631 X length *in inches* X the change in temperature). So most machines which get hot (or cold) will grow in length. They grow away from fixed points. You should be concerned most about vertical changes. However, machines will move vertically, horizontally, and axially.

Shaft Alignment with the Shaft^{100} & Shaft^{200} Systems

Dynamic Movement

- ☐ *Many machines move dynamically from their off-line alignment position when they are operated.*
- ☐ *Dynamic movement is mostly due to thermal expansion or contraction.*
- ☐ *Mostly, these changes occur vertically. However, it is possible to have horizontal movement as well.*
- ☐ *Therefore, you may intentionally misalign machines to compensate for dynamic movement.*

Figure 7- 1

Growth VS targets

- ☐ *Thermal growth is the actual change in positions of the stationary and movable elements.*
- ☐ *Targets are the compensation for that growth.*
- ☐ *Target values are entered in the Fixturlaser Shaft System.*
- ☐ *Example: If the motor grows 20 mils, and the pump does not grow, the target values would be –20 at both motor feet.*

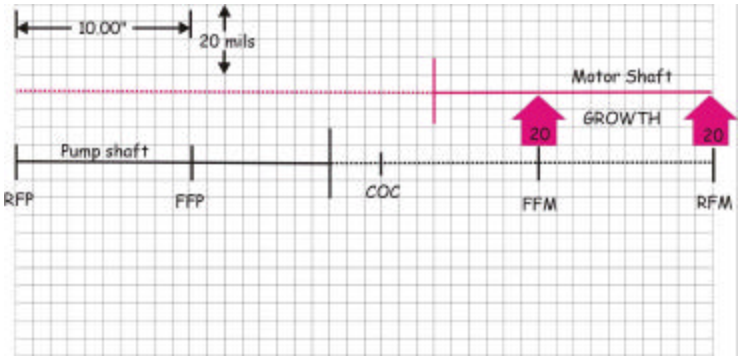

Figure 7- 2

Shaft Alignment with the Shaft100 & Shaft200 Systems

Targets and relative change

- ☐ *It is possible that both elements will grow.*
- ☐ *Typically, the stationary element grows more than the movable element.*
- ☐ *If you are making adjustments to the movable element, you will want to know the relative change (the difference).*
- ☐ *Example: Pump grows 20 mils. Motor grows 5 mils. Relative growth at motor feet = -15 mils. Target would be + 15 at motor feet.*

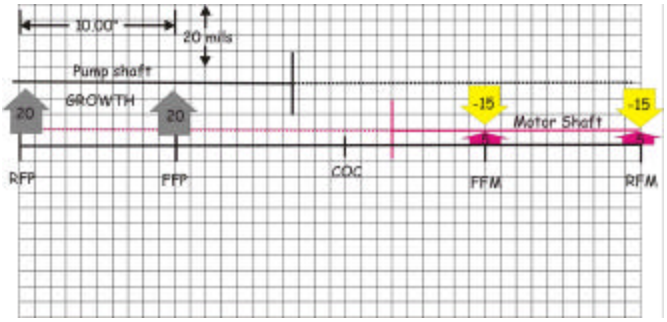

Figure 7- 3

Activity & Discussion 1: Dynamic Movement

Activity 1:

1. What is the primary cause of dynamic movement?

2. If thermal growth describes the actual movement associated with thermal influences, what are targets?

3. In the vertical axis, the pump grows 21 mils at both feet and the motor grows 2 mils at the feet. What is the relative growth of the motor at it's feet?

4. What would the target values be at the motor feet in the previous example?

In the following example, the pump grows vertically 20 mils at the rear feet, but only 15 mils at the front feet. The motor has no thermal change.

.

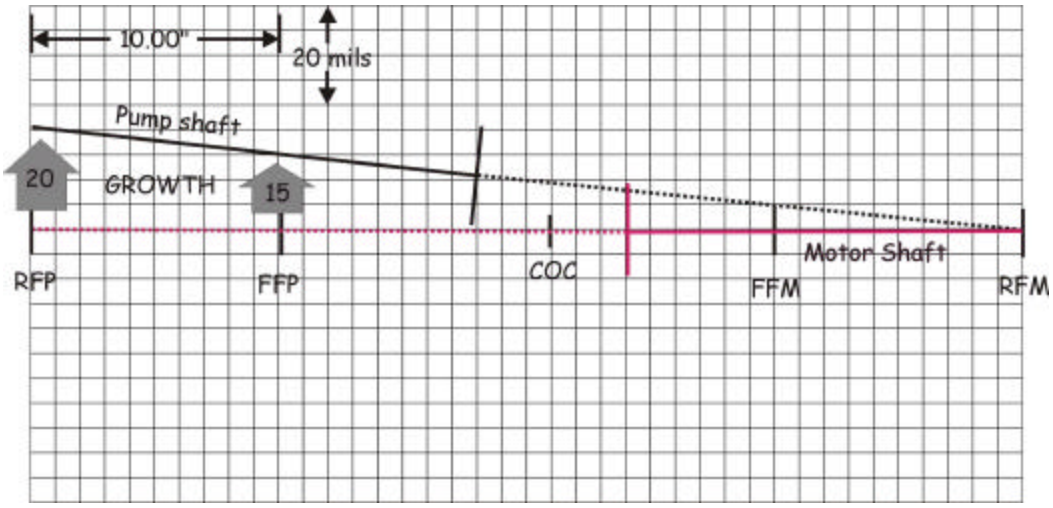

5. What is the *relative motor growth* at the front feet of the motor?

6. What is the *relative motor growth* at the rear feet of the motor?

7. What would the target values be at the motor feet?

Lesson 2 Objectives:

At the conclusion of this module the student shall be able to:

1. Enter target values at the machine feet into the *Shaft System* to compensate for thermal growth.

Target values to compensate for thermal growth

The *Fixturlaser Shaft System* will allow you to enter targets in four different ways. The target values can be entered at the movable machine feet, the stationary machine feet, as TD values, or as angle and offset targets.

VIBRALIGN

Shaft Alignment with the Shaft^{100} & Shaft^{200} Systems

Entering targets

❶ From the shaft alignment screen, touch to access the tools menu.
❷ From the tools menu, touch to access thermal target options.
☐ *You have four target input options: TD target values, angle and offset targets, stationary feet targets, or movable feet targets.*

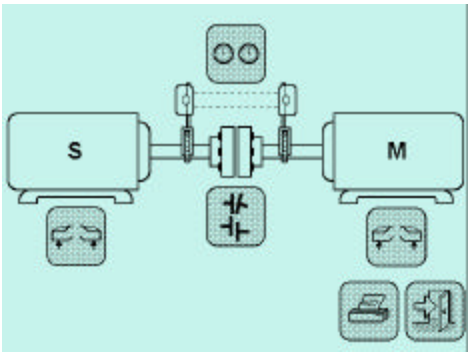

Figure 7- 5

Entering targets at the movable feet:

❶ *From the target input screen, touch under the movable machine.*

☐ *Two feet are displayed machine element icons, indicating vertical targets.*

❷ *To enter vertical targets, touch*

☐ *You will enter values at each foot.*

☐ *If you want to set the movable element low, enter negative values.*

☐ *If you want to set the movable element high, enter positive values.*

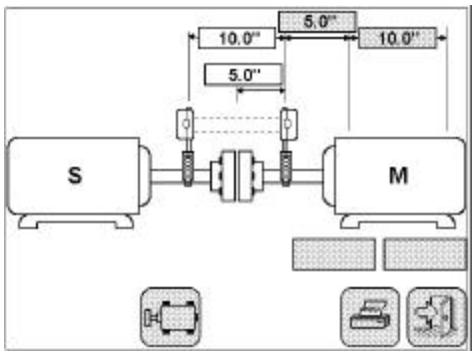

Figure 7- 6

Shaft Alignment with the Shaft100 & Shaft200 Systems

Entering targets at the movable feet:

❸ To enter horizontal targets, touch .

☐ *Four feet are displayed on the machine element icons, indicating horizontal targets.*

❹ Enter horizontal targets by touching .

☐ *If you want to set the movable element towards you, enter negative values.*

☐ *If you want to set the movable element away from you, enter positive values.*

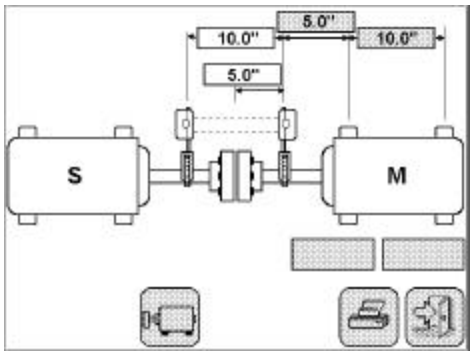

Figure 7- 7

Entering targets at the movable feet:

❺ After you enter the target values, touch OK to go back to the shaft alignment screen.

☐ *You will now be aligning to targets rather to zero.*

☐ *The thermal target icon will be displayed in the upper right corner of the shaft alignment screen.*

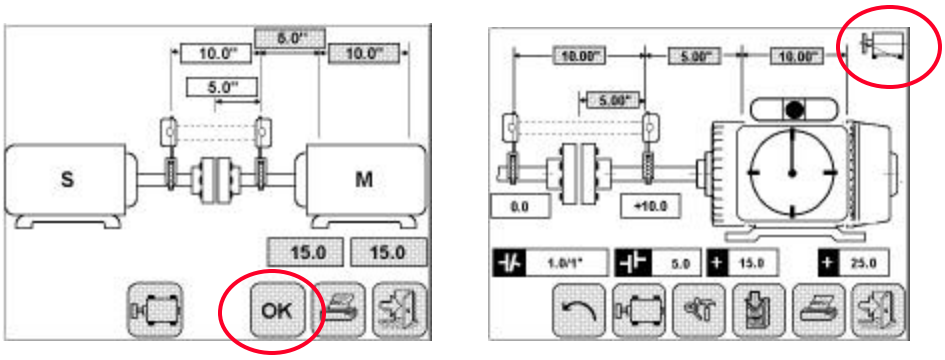

Figure 7- 8

VIBRALIGN
Shaft Alignment with the Shaft100 & Shaft200 Systems

Entering targets at the stationary feet:

❶ *From the target input screen, touch under the stationary machine.*

☐ *Two feet are displayed machine element icons, indicating vertical targets.*

❷ *Enter the "E" and "F" dimensions.*

❸ *To enter vertical targets, touch*

☐ *You will enter values at each foot.*

☐ *If you want to set the stationary element low, enter negative values.*

☐ *If you want to set the stationary element high, enter positive values.*

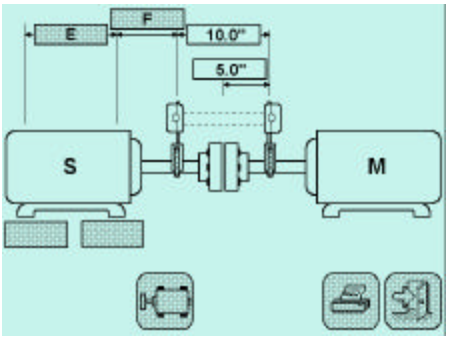

Figure 7- 9

Entering targets at the stationary feet:

❹ To enter horizontal targets, touch .

☐ *Four feet are displayed on the machine element icons, indicating horizontal targets.*

❺ Enter horizontal targets by touching .

☐ *If you want to set the stationary element towards you, enter negative values.*

☐ *If you want to set the stationary element away from you, enter positive values.*

❻Touch OK to enter targets & go back to the shaft alignment screen.

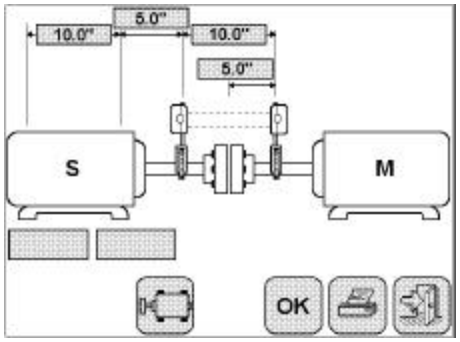

Figure 7- 10

Activity 2: Entering targets at machine feet

Activity 2 Instructions:

1. Take a set of alignment data and record the front foot and rear foot values (vertical and horizontal).

2. The stationary machine grows vertically 12 mils. There is no horizontal growth. Therefore, the movable machine targets will be positive 12 mils, vertically at both feet.

3. Enter the target values for the movable feet into your *Fixturlaser Shaft System*.

4. Touch "OK" to save the target data and return to the shaft alignment screen.

5. Take a new shaft alignment data and record the foot values

Activity 2 Discussion:

1. Why are the values different after entering the targets?

2. Look for an indication on the screen that thermal offsets have been entered. Describe what you see.

3. Why do growth & target value have reversed signs?

Activity 3: Compensating for desired angle & offset values

Lesson 3 Objectives:

At the conclusion of this module the student shall be able to:

1. Enter angle and offset values in the *Fixturlaser Shaft System* to compensate for thermal growth.

Compensating for desired angle & offset values

Many machinery manufacturers will specify alignment targets as a radial offset and a face offset. The *Fixturlaser Shaft System* expects the data to be entered as an angle and an offset. The radial offset value can be entered directly. However, the face offset must be first converted into an angle. You must know the diameter of the coupling. The face offset is divided by the coupling diameter to determine the angle.

VIBRALIGN

Shaft Alignment with the Shaft^{100} & Shaft^{200} Systems

Manufacturer's targets

- ☐ *Many manufacturers give targets as a radial and face offset.*

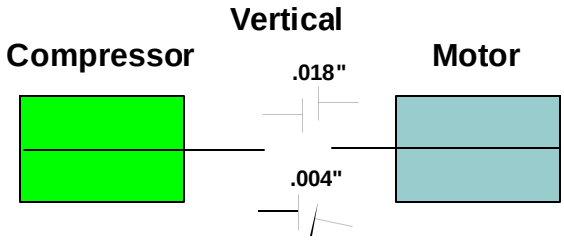

- ☐ *You can enter the radial offset as 18 mils directly into the Fixturlaser Shaft System.*
- ☐ *To enter the face offset, you will need to know the coupling diameter.*
- ☐ *Divide 4 mils by the coupling diameter to determine the angle.*
- ☐ *This will be a negative angle.*

Figure 7- 11

Entering targets

❶ From the shaft alignment screen, touch to access the tools menu.
❷ From the tools menu, touch to access thermal target options.
☐ *You have four target input options: TD target values, angle and offset targets, stationary feet targets, or movable feet targets.*

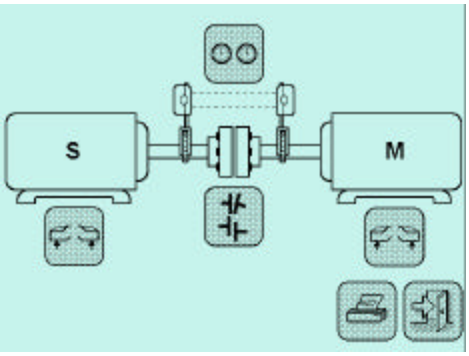

Figure 7- 12

Shaft Alignment with the Shaft[100] & Shaft[200] Systems

Entering targets: offset and angle

❶ *From the target input screen, touch .*
☐ *Two feet are displayed under the machine element icons, indicating you can input vertical targets.*
❷ *To enter the vertical offset target, touch .*
☐ *If you want to set the movable element low, enter negative values.*
☐ *If you want to set the movable element high, enter positive values.*

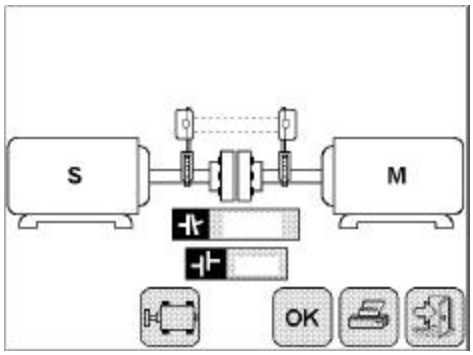

Figure 7- 13

Entering targets: offset and angle

❸ *To enter the vertical angle, touch .*

- ☐ *If the coupling gap is wide at the bottom, enter a positive value.*
- ☐ *If the coupling gap is wide at the top, enter a negative value.*

❹ *To enter horizontal targets, touch and enter data.*

- ☐ *If you want to set the movable element low, enter negative values.*
- ☐ *If you want to set the movable element high, enter positive values.*

❺ Touch OK to register targets & go back to the shaft alignment screen.

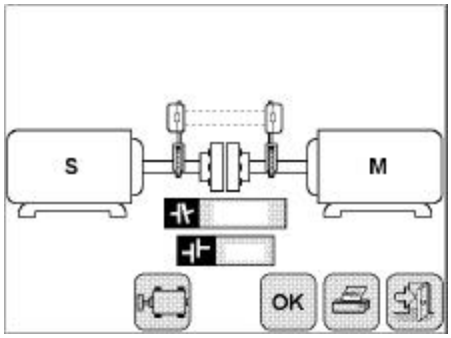

Figure 7- 14

Activity 3: Compensating for desired angle & offset values

Activity 3 Instructions:

1. The vertical data is: angle = 1.0 mils per inch, offset = 5 mils. There are no horizontal targets.

2. In the shaft alignment program, enter the same dimensions from the previous activities. Rotate the TD's to 12:00. Touch 9:00, 3:00, and 12:00 without rotating the TD's. *Record the values at the front and rear feet.*

3. Enter the vertical angle & offset values. Return to the shaft alignment screen. *Record the new front and rear foot values.*

Activity 3 Discussion:

1. Why are the values different after entering the targets?

Unit 8

Measuring, evaluating & correcting misalignment with the clock method.

Measuring, evaluating & correcting activities
Lesson 1: Understanding the clock method & configurations
Lesson 2: Measuring misalignment (clock method)
Lesson 3: Evaluating Alignment Results (clock method)
Lesson 4: Correcting misalignment (clock method)

Required Materials:
(1) Shaft alignment demonstrator
(1) *Fixturlaser Shaft System*
(1) Box pre-cut shims (size A)

Lesson 1 Objectives:

At the conclusion of this module the student shall be able to:

1. Describe the difference between the tri-point and clock methods.

2. Identify when you should use the clock method.

Understanding the clock method & re-configurations

The tri-point method used the inclinometer angles to make calculations. In contrast, the clock method only uses the inclinometer for the operator to reference exact TD clock positions. The clock method is used when the coupling is not made up and the shafts need to be rotated independently.

In the clock method, measurements are registered at 9:00, 3:00, and 12:00, in that order. The inclinometer will guide you to precise clock positions. When the measure button is touched, your main concern should be ensuring that the measurements have registered before you rotate the shafts to the next position. If you have configured program (in the tool box) for a 3 second sampling time, you will wait 3 seconds before rotating the TD's to the

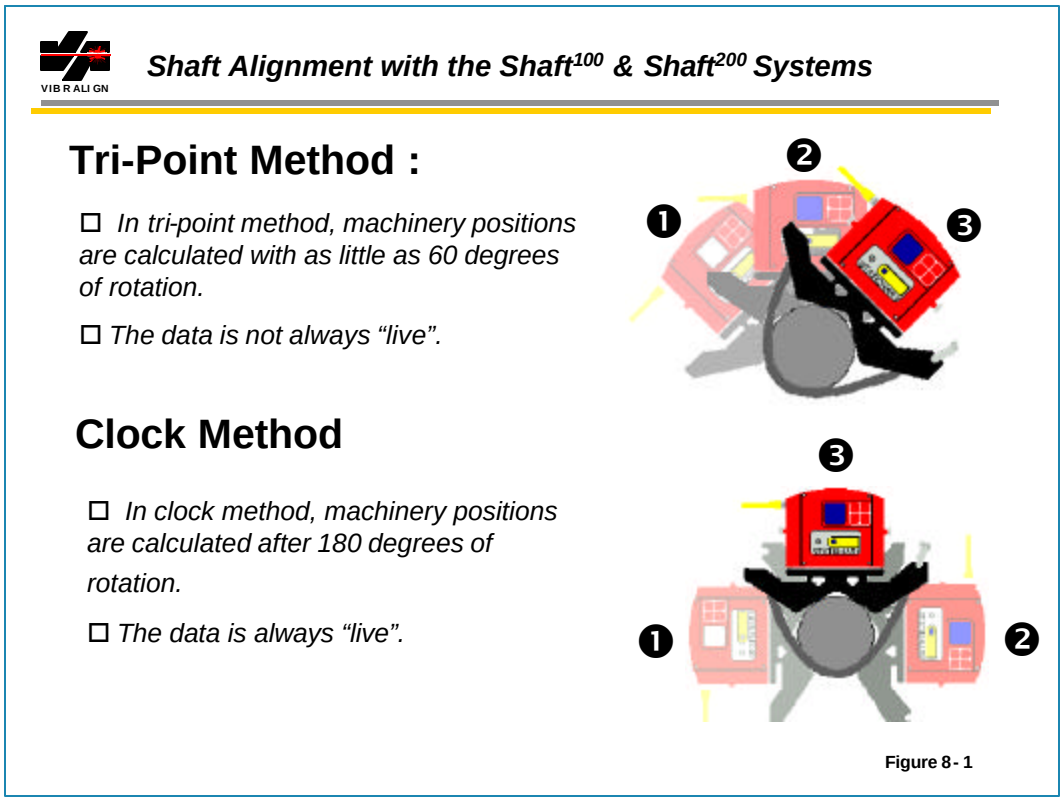

Figure 8 - 1

Configuring for the Clock Method :

❶ From within the shaft alignment program, access the tools menu.
❷ Touch to configure for the clock method.

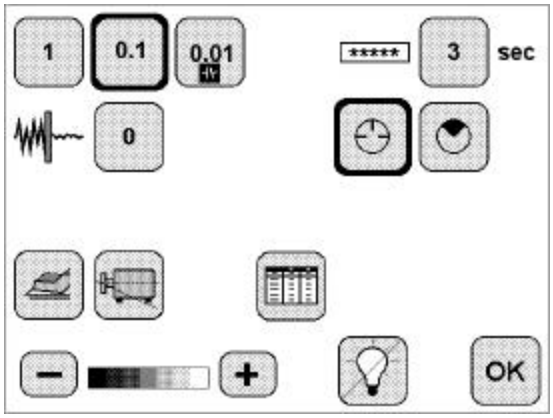

Figure 8- 2

Activity 1: Understanding the clock method & re-configurations

Activity 1:

Read and review the previous page. Then answer the following questions:

1. In your opinion, what are the three major differences between the two methods?

2. How do you re-configure the *Shaft System* for tri-point method?

Lesson 2 Objectives:

At the conclusion of this module the student shall be able to:

1. Demonstrate the shaft alignment measuring process using the clock method.

.

Measuring misalignment (clock method)

Using the clock method, measurements taken at 9:00, 3:00, and at 12:00, in that order. The TD values “zero” after the 9:00 measurement is registered and the system displays the horizontal results after the 3:00 measurement is registered. As in the tri-point measurement, be sure that the measurements have registered before you rotate the shafts to the next position. If you have configured program (in the tool box) for a 3 second sampling time, you will wait 3 seconds before rotating the TD’s to the next position. The TD value blocks show asterisks while the system is sampling.

Shaft Alignment with the Shaft^{100} & Shaft^{200} Systems

Measuring Misalignment:

❶ Open the detector covers.
❷ Rotate the TD’s to 9:00.
☐ *Use the inclinometer as a guide.*
☐ *The bubble does not have to be exactly centered.*
❸ Touch to register readings.

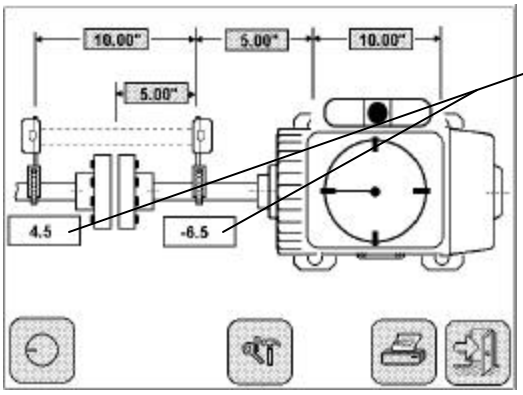

The TD value blocks show asterisks while the system samples data.

Figure 8 - 3

Measuring Misalignment:

❹ Rotate the TD's to 3:00
❺ Touch to register readings.

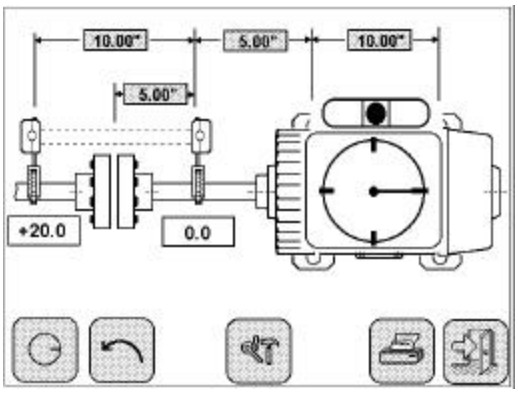

Figure 8 - 4

Shaft Alignment with the Shaft100 & Shaft200 Systems

Measuring Misalignment:

❻ Rotate the TD's to 12:00
❼ Touch to register readings.

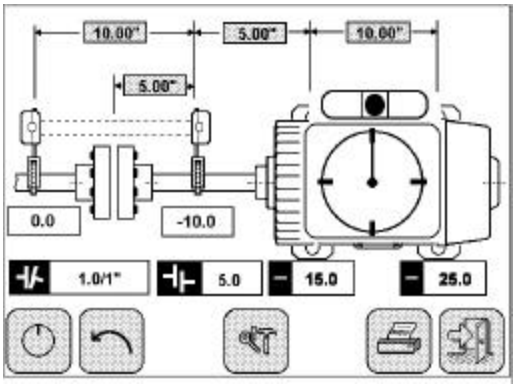

Figure 8 - 5

Activity 2: Measuring misalignment (clock method)

Activity 2 Instructions:

1. On the alignment demonstrator, measure the misalignment at 9:00, 3:00, and 12:00.

Activity 2 Discussion:

1. Does the level “bubble” have to be exactly centered?

2. How do you know if the alignment measurement has been registered?

3. What could happen if you rotate the shafts before the values are registered?

Lesson 3: Evaluating Alignment Results (clock method)

Lesson 3 Objectives:

At the conclusion of this module the student shall be able to:

1. Identify the vertical & horizontal angular misalignment values from the DU.
2. Identify the vertical & horizontal offset misalignment values from the DU.
3. Evaluate whether the alignment values satisfy tolerances.

Evaluating Alignment Results

Alignment is evaluated by comparing the angular & offset misalignment data to tolerances for a selected machinery rpm. The angular and offset alignment data is found under the coupling on the shaft alignment screen. You need to satisfy the tolerances for both the vertical and horizontal data. If the angular and offset data are *both* acceptable vertically, then you will evaluate the horizontal data. If either are unacceptable, a correction will be made.

VIBRALIGN

Shaft Alignment with the Shaft^{100} & Shaft^{200} Systems

Evaluating vertical results:

❶ The vertical results are presented first.

☐ *The motor icon shows two feet indicating a "side view".*

☐ *The TD's must be at 12:00*

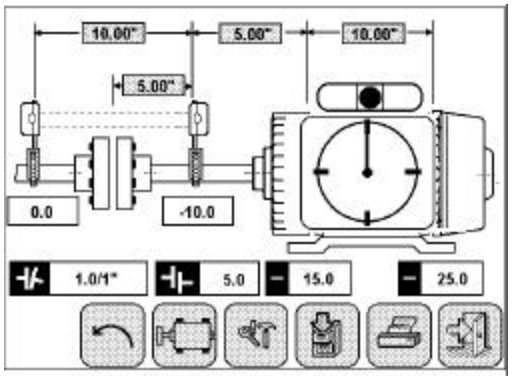

Figure 8- 6

Evaluating vertical results:

❷ Angle and offset values are used to determine the alignment quality.

☐ *Compare them to alignment tolerances to determine whether correction is necessary.*

	Angular Misalignment mils/inch		Offset Misalignment mils	
RPM	Excellent	Acceptable	Excellent	Acceptable
3600	0.3/1"	0.5/1"	1.0	2.0
1800	0.5/1"	0.7/1"	2.0	4.0
1200	0.7/1"	1.0/1"	4.0	6.0
900	1.0/1"	1.5/1"	6.0	6.0

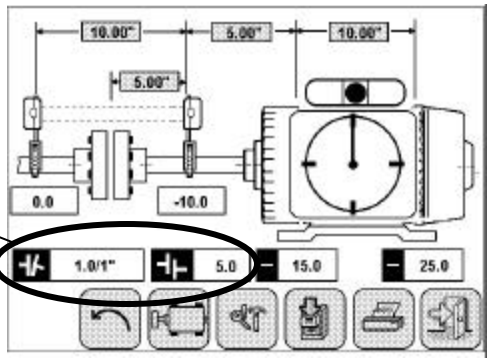

Foot values are used to make corrections if the tolerances are exceeded.

☐ *Negative values mean the machine is low and must be shimmed.*

☐ *Positive values mean the machine is high. Therefore, shims will be removed.*

Figure 8 - 7

Evaluating horizontal results:

❶ Rotate the TD's to 3:00.

❷ Touch to see the horizontal results.

☐ *The motor icon will show 4 feet indicating a "top view".*

☐ *The TD's must be at 3:00.*

☐ *You can toggle back and forth to change views, however you must also rotate the TD's to correspond.*

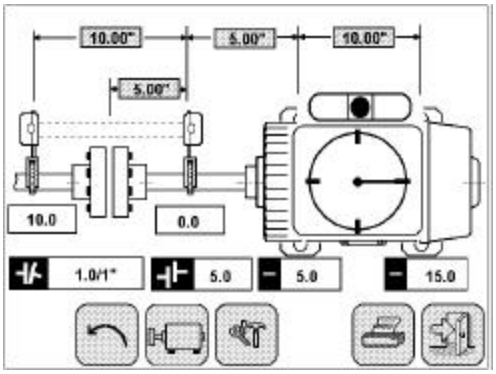

Figure 8 - 8

Evaluating horizontal results:

❸ Angle and offset values are used to determine the alignment quality.
☐ *Compare them to alignment tolerances to determine whether correction is necessary.*

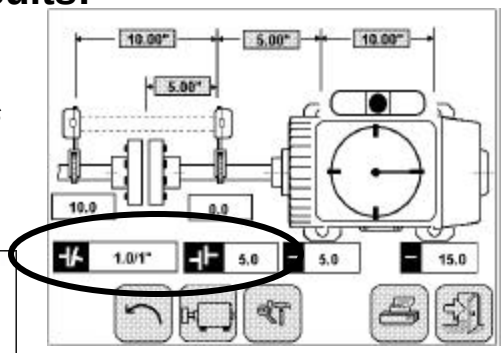

	Angular Misalignment mils/inch		Offset Misalignment mils	
RPM	Excellent	Acceptable	Excellent	Acceptable
3600	0.3/1"	0.5/1"	1.0	2.0
1800	0.5/1"	0.7/1"	2.0	4.0
1200	0.7/1"	1.0/1"	4.0	6.0
900	1.0/1"	1.5/1"	6.0	6.0

Foot values are used to make corrections if the tolerances are exceeded.
☐ *Negative values mean the machine is towards you and must be pushed away.*

☐ *Positive values mean the machine is away from you needs to move towards you.*

Figure 8 - 9

Activity 3 & Discussion:

Given this screen display, answer the following questions:

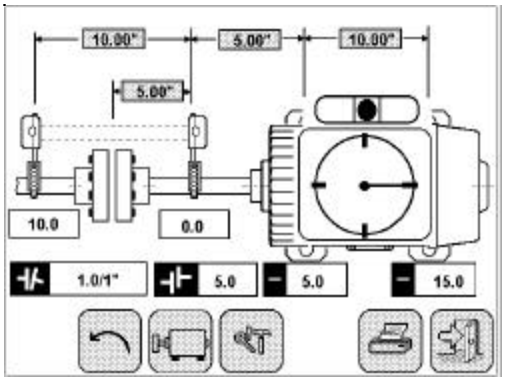

1. The screen indicates you are looking at vertical or horizontal results? (circle one)

2. The TD's would be at which position?

3. The angular misalignment value is?

4. Is this acceptable if the machine rpm is 1800? Yes or No

5. The offset misalignment value is ?

6. The angle and offset values are used for what purpose?

7. If you wanted to see the vertical results, what would you do?

Lesson 4: Correcting Misalignment (clock method)

Lesson 4 Objectives:

At the conclusion of this module the student shall be able to:

1. Demonstrate the correction of vertical & horizontal misalignment.
2. You will be able to show alignment within excellent tolerances.

Correcting misalignment

You make final vertical corrections before going to final horizontal alignments. This is because you will most likely change the horizontal alignment as you make vertical adjustments. Horizontal adjustments usually have less effect on vertical positions. All the same, if the initial horizontal misalignment is severe (foot values over 25 mils), you will find that a "quick" (don't try to achieve zero's) horizontal adjustment will expedite the whole process.

VIBRALIGN

Shaft Alignment with the Shaft^{100} & Shaft^{200} Systems

Correcting Misalignment:

❶ Correct vertical misalignment.

- ☐ *TD's are at 12:00.*
- ☐ *Motor icon shows two feet indicating a side view.*
- ☐ *Record the foot values.*
- ☐ *Make the appropriate shim changes.*

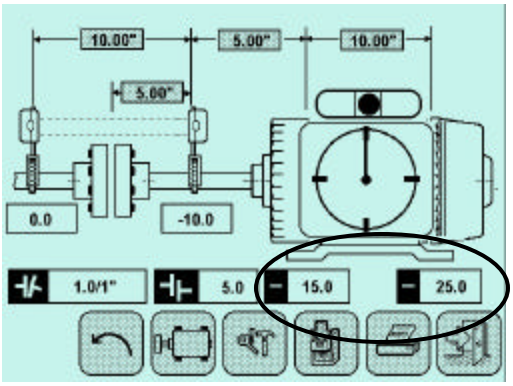

☐ *Positive values at the feet mean the movable machine is high, therefore you will remove shims.*

☐ *Negative values mean the movable machine is low, so you will add shims.*

Figure 8 - 10

Correcting Misalignment:

❷ Correct horizontal misalignment.

- ☐ *Rotate TD's to 3:00*
- ☐ *Touch*
- ☐ *Motor icon shows four feet indicating a top view.*
- ☐ *Move the machine horizontally watching the foot values.*

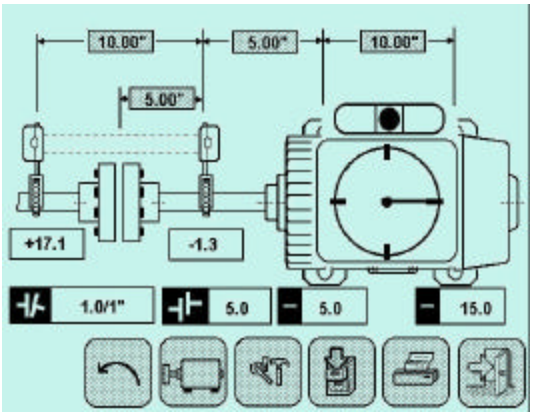

- ☐ *Negative values mean that the feet need to move away from you because the machine is towards you.*
- ☐ *Positive values mean that the feet need to come toward you because the machine is away from you.*
- ☐ *As foot values become small, glance at angle and offset icons to determine alignment quality.*

Figure 8- 11

Correcting Misalignment:

❸ Re-measure misalignment

- ☐ *Press backward arrow.*
- ☐ *Confirm the re-measure prompt to clear alignment data.*
- ☐ *Repeat the measurement process.*

❹ *Re-evaluate and correct again, if necessary.*

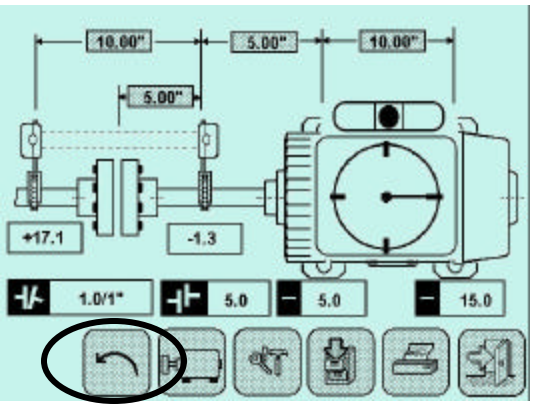

Figure 8- 12

Activity 4: Correcting Misalignment (clock method)

Activity 4 Instructions:

On your alignment demonstrator:

1. Touch the two footed icon to view vertical results.
2. Correct the vertical misalignment. + at feet: remove shims, - at feet: add shims.
3. Rotate the TD's to 3:00.
4. Correct the horizontal misalignment. Align to excellent, 1800 rpm.
5. Re-measure and reevaluate both vertical and horizontal misalignment.
6. Correct again if tolerances are not satisfied.

Activity 4 Discussion:

1. Why might you need to make more than one move to satisfy the alignment tolerances?

2. List at least three differences between the clock & tri-point methods.